DIMENSIONS

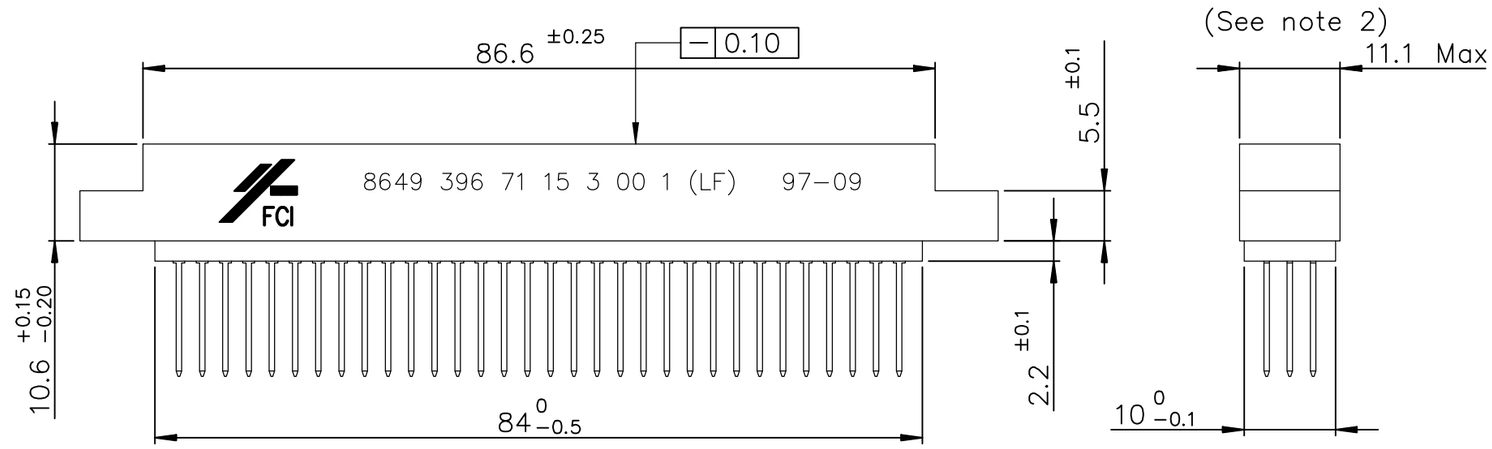

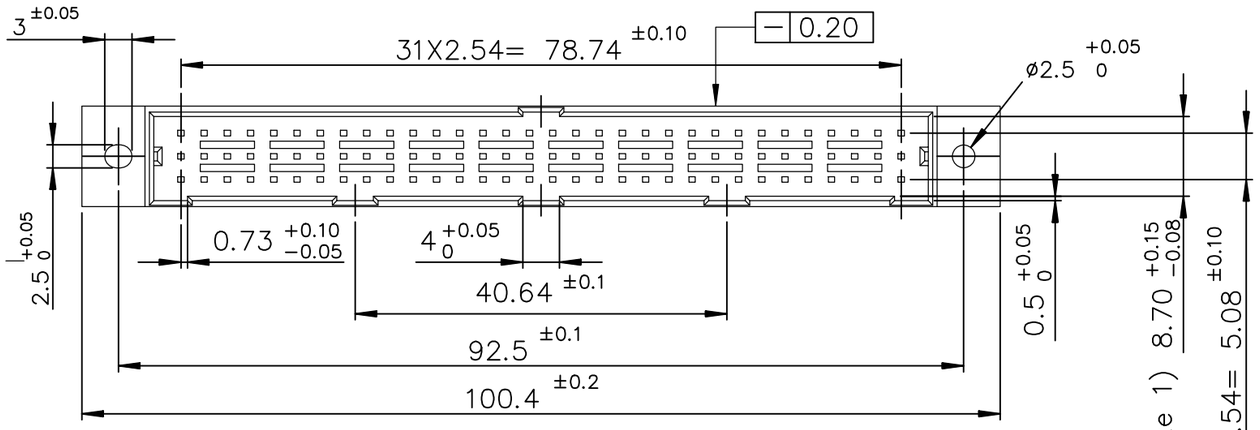

ELECTRICAL CHARACTERISTICS

−current rating	1.5 A at 20° / 1 A at 70°
−I max	2A
−Contact resistance	≤20 mΩ
−Insulation resistance	≥10^6 MΩ
−TEST VOLTAGE	
contact/contact	1000V eff (0.5 mA / 50 Hz)
contact/ground	2000V eff (0.5 mA / 50 Hz)

MECHANICAL CHARACTERISTICS

−Contact number	96
−Retention force	≥20N per contact
−Material insulator	Polyester thermoplastic
−Color	Grey RAL 7035
−Extinguishing	UL94V0
−Temperature range	− 55° C + 125° C
−Material contacts	Brass Cu Zn 30
−Hardness	158 to 188 HV

TIN LEAD VERSION

−Finishing contact surface	Nickel : 2µm min + PdNi Alloy : 0.94µm min + Gold : 0.065 µm min
−Other area	Nickel

LEAD FREE VERSION

NOTE RoHS INFORMATION

- The "LF" products meet European Union Directives and other country regulations as described in GS-22-008.
- The housing will whistand exposure to 260°C peak temperature for 3.5 seconds in a wave solder application with a 1.6mm minimum thick circuit board. See application notes/procedures if they are available.
- Termination plating spec: Tin (pure matte) over Nickel.
- Packaging spec: see GS-14-920

TERMINATION

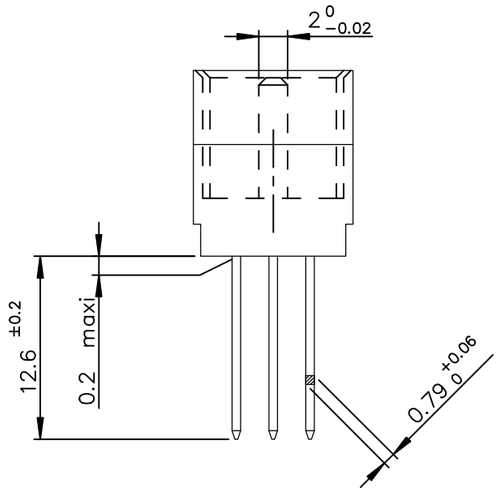

TIN LEAD PART NUMBER

PART NUMBER
86493967115 3001

LEAD FREE PART NUMBER

PART NUMBER
86493967115 3001LF

NOTES

1: The minimum value requested will be guaranteed evrywhere, but the maximum value only at each extremity at the top and at the bottom of the cavity
2: Including the rectitude defauft of each side

rev	ecn no	dr	date
F	−	JTA	1997/05/27
G	LS05-0056	LGO	2005/06/29
H	LS06-0095	LGO	2006/06/30
J	ELX-I-010140-1	MJA	2012/02/01
−	−	−	−
−	−	−	−
−	−	−	−

European Views

www.fciconnect.com			surface ISO 1302 ✓	tolerance std ISO 406 ISO 1101		projection	mm
			TOLERANCES UNLESS OTHERWISE SPECIFIED				
Dr	TARON	1991/04/03	ANGULAR	LINEAR	0.X ±0.1	size A3	Scale 1.5
Eng	TARON	1991/04/03			0.XX ±0.1		
Chr	LEGARE	1991/04/03	0.XX° ±2°		0.XXX ±0.1	ECN	ELX-I-010140-1
Appr	LEGARE	1991/04/03	Product family		DIN PHILIPS	Spec ref	−
			title CONNECTOR MALE 3R, FIXING F-123			dwg no C-8649-0001	Rev. J
			catalog no −			CUSTOMER	sheet 1 of 1

Copyright FCI.

REV F − 2006-04-17

PDS: Rev :J STATUS:Released Printed: Feb 02, 2012