Pushing Performance
Since 1945

# DIN-Signal B064MS-3,0C1-3

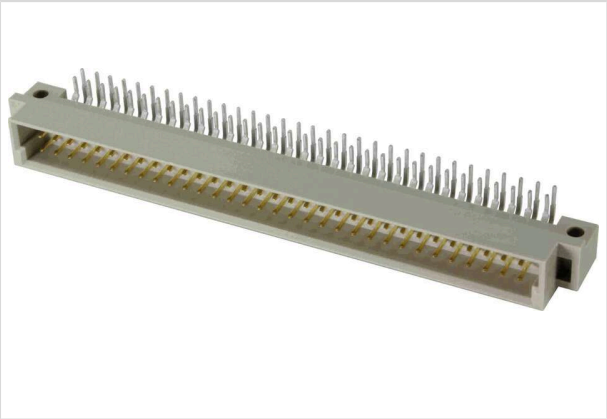

Image is for illustration purposes only. Please refer to product description.

| | |
|---|---|
| Part number | 09 02 164 7921 |
| Specification | DIN-Signal B064MS-3,0C1-3 |
| HARTING eCatalogue | https://harting.com/09021647921 |

## Identification

| | |
|---|---|
| Category | Connectors |
| Series | DIN 41612 |
| Identification | Type B |
| Element | Male connector |
| Description of the contact | Angled |

## Version

| | |
|---|---|
| Termination method | Wave soldering termination |
| Connection type | Motherboard to daughtercard<br>Extender card<br>PCB to cable |
| Number of contacts | 64 |
| Contact configuration | Rows a and b, positions 1, 2, ... , 31, 32 |
| Coding | Coding with loss of contacts<br>Side coding |
| PCB fixing | With fixing flange |

## Technical characteristics

| | |
|---|---|
| Contact rows | 2 |
| Contact spacing (termination side) | 2.54 mm |
| Contact spacing (mating side) | 2.54 mm |
| Rated current | 2 A |
| Rated current | Rated current measured at 20 °C, see derating curve for details |
| Clearance distance | ≥1.2 mm |


HARTING Electronics GmbH | Marienwerderstraße 3 | 32339 Espelkamp | Germany
Phone +49 5772 47-97200 | electronics@HARTING.com | www.HARTING.com

Pushing Performance
Since 1945

## Technical characteristics

| | |
|---|---|
| Creepage distance | ≥1.2 mm |
| Insulation resistance | $>10^{12}$ Ω |
| Contact resistance | ≤20 mΩ |
| Limiting temperature | -55 ... +125 °C |
| Insertion force | ≤60 N |
| Withdrawal force | ≤40 N |
| Performance level | 3<br>acc. to IEC 60603-2 |
| Mating cycles | ≥50 |
| Test voltage $U_{r.m.s.}$ | 1 kV |
| Isolation group | IIIa (175 ≤ CTI < 400) |
| Hot plugging | No |

## Material properties

| | |
|---|---|
| Material (insert) | Thermoplastic resin, glass-fibre filled |
| Colour (insert) | RAL 7032 (pebble grey) |
| Material (contacts) | Copper alloy |
| Surface (contacts) | Au over NiP over Ni Mating side<br>Sn over Ni Termination side |
| Material flammability class acc. to UL 94 | V-0 |
| RoHS | compliant |
| ELV status | compliant |
| China RoHS | e |
| REACH Annex XVII substances | Not contained |
| REACH ANNEX XIV substances | Not contained |
| REACH SVHC substances | Not contained |
| California Proposition 65 substances | Yes |
| California Proposition 65 substances | Lead<br>Nickel |
| Fire protection on railway vehicles | EN 45545-2 (2020-08) |
| Requirement set with Hazard Levels | R26 |

## Specifications and approvals

| | |
|---|---|
| Specifications | IEC 60603-2 |


HARTING Electronics GmbH | Marienwerderstraße 3 | 32339 Espelkamp | Germany
Phone +49 5772 47-97200 | electronics@HARTING.com | www.HARTING.com

Pushing Performance
Since 1945

## Specifications and approvals

| | |
|---|---|
| UL / CSA | UL 1977 ECBT2.E102079<br>CSA-C22.2 No. 182.3 ECBT8.E102079 |
| Railway classification | F4/I3 acc. to NFF 16-101/102 |

## Commercial data

| | |
|---|---|
| Packaging size | 130 |
| Net weight | 10.635 g |
| Country of origin | Germany |
| European customs tariff number | 85366990 |
| GTIN | 5713140003491 |
| eCl@ss | 27460201 PCB connector (board connector) |
| ETIM | EC002637 |
| UNSPSC 24.0 | 39121415 |

### Current carrying capacity

The current carrying capacity of the connectors is limited by the thermal load capability of the contact element material including the connections and the insulating parts. The derating curve is therefore valid for currents which flow constantly (non-intermittent) through each contact element of the connector evenly, without exceeding the allowed maximum temperature.
Measuring and testing techniques acc. to IEC 60512-5-2

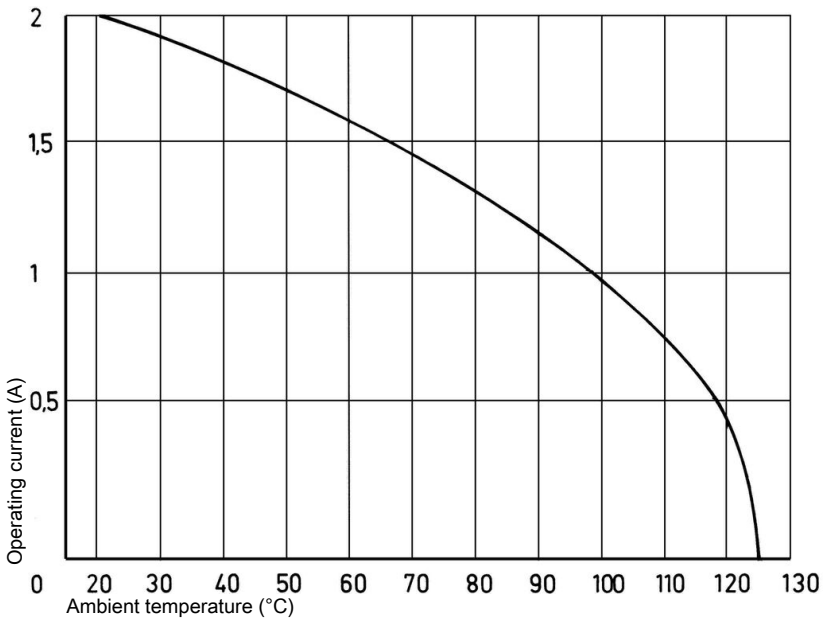



HARTING Electronics GmbH | Marienwerderstraße 3 | 32339 Espelkamp | Germany
Phone +49 5772 47-97200 | electronics@HARTING.com | www.HARTING.com

Pushing Performance
Since 1945

Side coding
(without loss of contact)

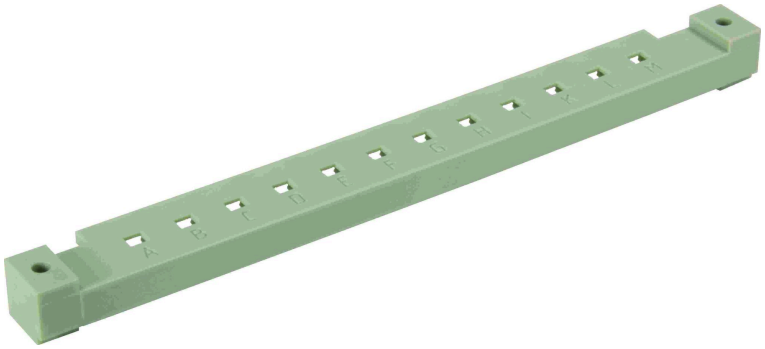

To avoid cross-plugging of adjacent connectors a coding system is required.
This coding system is an integral part of both male and female connectors. A comb with 12 coding pins, which is supplied under part number 09 02 000 9928, allows over 900 coding variations. The pins are to be locked into the male and female connectors.
These coding bars can be screwed on the top side of angled male and female connectors. They are alternatives to the male and female connectors with pre-assembled or splashed coding bars. As far as available we recommend the connectors with pre-assembled or splashed coding bar.

Coding with loss of contacts
To avoid cross-plugging of adjacent connectors a coding system is required.
The coding is achieved by means of a code pin which is inserted into the selected chamber of the female connector (the contact cavity must be filled with a female contact!).
The opposite male contact must be removed with the help of the specially designed tool. It’s recommended to use a number of code pins in relation to the total number of contacts per connector: 3 pins for 64 contacts, 7 pins for 160 contacts
Coding pin 09 02 000 9901
Removal tool for male contacts 09 99 000 0133

Cross section of solder termination

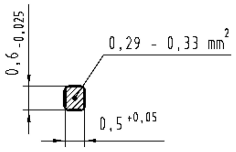



HARTING Electronics GmbH | Marienwerderstraße 3 | 32339 Espelkamp | Germany
Phone +49 5772 47-97200 | electronics@HARTING.com | www.HARTING.com

Pushing Performance
Since 1945

Soldering instructions

The connectors should be protected when being soldered. Otherwise, they might become contaminated as a result of soldering operations or deformed as a result of overheating.
1) For prototypes and short runs protect the connectors with an industrial adhesive tape, e.g. Tesaband 4331 (www.tesa.de). Cover the underside of the connector moulding and the adjacent parts of the pcb as well as the open sides of the connector. This will prevent heat and gases of the soldering apparatus from damaging the connector. About 140 + 5 mm of the tape should suffice.
2) For large series a jig is recommended. Its protective cover with a fast action mechanical locking devie shields the connectors from gas and heat generated by the soldering apparatus. As an additional protection a foil can be used for covering the parts that should not be soldered.
3) For prototypes and short runs the protection described under point 1) can be replaced by a solder protection cap. This cap can be ordered under the part no. 09 02 000 9935.

Mating conditions

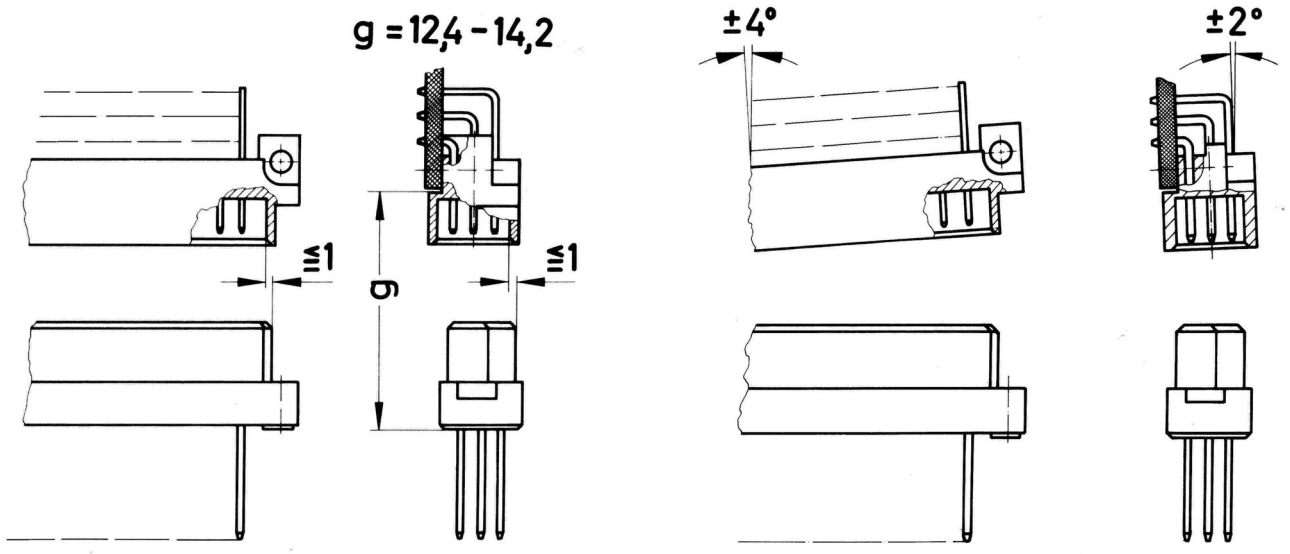


To ensure reliable connections and prevent unnecessary damage, please refer to the application data diagrams. These recommendations are set out in IEC 60603-2.
The connectors should not be coupled and decoupled under electrical load.


HARTING Electronics GmbH | Marienwerderstraße 3 | 32339 Espelkamp | Germany
Phone +49 5772 47-97200 | electronics@HARTING.com | www.HARTING.com