CUDEVICES

MODEL: SP-35401 | DESCRIPTION: 3.5 MM STEREO PLUG

FEATURES

- 4 conductor
- modular strain relief



RoHS

SPECIFICATIONS

parameter	conditions/description	min	typ	max	units
contact resistance				30	mΩ
insulation resistance	at 500 Vdc	100			MΩ
voltage withstand	at 50/60Hz for 1 minute			500	Vac
operating temperature		-25		70	°C
RoHS	yes				

MECHANICAL DRAWING

units: mm[inches]
tolerance: ±0.3mm
unless otherwise specified

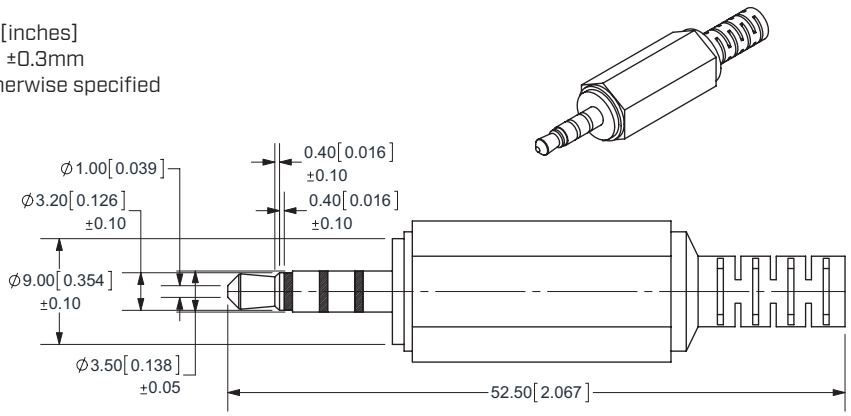

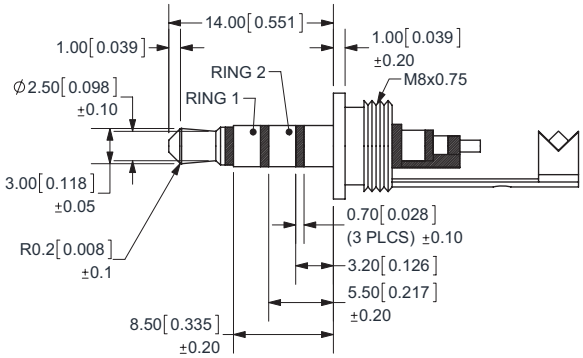

	MATERIAL	PLATING
tip	brass	nickel
insulator	ABS	black color
ring (1)	brass	nickel
ring (2)	brass	nickel
sleeve	brass	nickel
earth terminal	brass	nickel
body	PVC or TPR	black color

Note: 1. All specifications measured at 10~35°C with a relative humidity of 45~85% under standard atmospheric pressure unless otherwise specified.

REVISION HISTORY

rev.	description	date
1.0	initial release	05/05/2011
1.01	body material changed to TPR	08/30/2013
1.02	brand update	10/11/2019
1.03	logo, datasheet style update	01/25/2023

The revision history provided is for informational purposes only and is believed to be accurate.

CUI Devices offers a one (1) year limited warranty. Complete warranty information is listed on our website.

CUI Devices reserves the right to make changes to the product at any time without notice. Information provided by CUI Devices is believed to be accurate and reliable. However, no responsibility is assumed by CUI Devices for its use, nor for any infringements of patents or other rights of third parties which may result from its use.

CUI Devices products are not authorized or warranted for use as critical components in equipment that requires an extremely high level of reliability. A critical component is any component of a life support device or system whose failure to perform can be reasonably expected to cause the failure of the life support device or system, or to affect its safety or effectiveness.

cuidevices.com