VS-M8MS-IP20/93B-0,5 - Network cable

1402452

https://www.phoenixcontact.com/us/products/1402452

Please be informed that the data shown in this PDF document is generated from our online catalog. Please find the complete data in the user documentation. Our general terms of use for downloads are valid.



Network cable, Ethernet (100 Mbps), PROFINET (100 Mbps), EtherCAT® (100 Mbps), 4-position, PVC/PVC, green RAL 6018, shielded (Aluminum-coated foil, tinned copper braided shield), Plug straight M8, coding: A / IP67, on Plug straight RJ45 / IP20, cable length: 0.5 m

Commercial data

Item number	1402452
Packing unit	1 pc
Minimum order quantity	1 pc
Sales key	BF02
Product key	BF1BJI
Catalog page	Page 322 (PC-2011)
GTIN	4046356616096
Weight per piece (including packing)	59.5 g
Weight per piece (excluding packing)	59.2 g
Customs tariff number	85444290
Country of origin	PL

Technical data

Product properties

Product type	Data cable preassembled
Application	Standard
Sensor type	Ethernet
Number of positions	4
No. of cable outlets	1
Shielded	yes

Insulation characteristics

Overvoltage category	II
Degree of pollution	3

Interfaces

Signal type/category	Ethernet, 100 Mbps
	PROFINET, 100 Mbps
	EtherCAT®, 100 Mbps

Signaling

Status display	No

Electrical properties

Nominal voltage U_N	30 V AC
	30 V DC
Nominal current I_N	1 A
Transmission medium	Copper
Transmission characteristics (category)	CAT5

Material specifications

Flammability rating according to UL 94	HB

Connector

Connection 1

Type	Plug straight M8 / IP67
Number of positions	4 (4)
Coding type	A (Standard)
Shielded	yes
Handle color	black
Material	CuSn (Contact)
	Ni/Au (Contact surface)
	TPU GF (Contact carriers)
	TPU, hardly inflammable, self-extinguishing (Grip)
	CuZn (nickel-plated) (Screw connection)

Insertion/withdrawal cycles	≥ 100
Insulation resistance	≥ 100 MΩ
Tightening torque	0.2 Nm
Degree of protection	IP67
Ambient temperature (operation)	-25 °C ... 90 °C

Connection 2

Type	Plug straight RJ45 / IP20
Number of positions	4 (8)
Shielded	yes
Handle color	gray
Material	CuSn (Contact)
	Ni/Au (Contact surface)
	PC (Contact carriers)
	PA (Housing)
Insertion/withdrawal cycles	≥ 750
Degree of protection	IP20
Ambient temperature (operation)	-10 °C ... 60 °C

Cable/line

Cable length	0.5 m

PROFINET PVC stranded CAT5 [93B]

Dimensional drawing	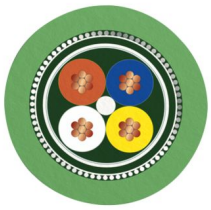
Cable weight	67 kg/km
UL AWM Style	21694
Number of positions	4
Shielded	yes
Cable type	PROFINET PVC stranded CAT5 [93B]
Conductor structure	1x4xAWG22/7, SF/TQ
Signal runtime	5.3 ns/m
Signal speed	0.66 c
Conductor structure signal line	7x 0.25 mm
AWG signal line	22
Conductor cross section	4x 0.34 mm²
Wire diameter incl. insulation	1.55 mm
External cable diameter	6.50 mm ±0.2 mm
Outer sheath, material	PVC

External sheath, color	green RAL 6018
Conductor material	Tin-plated Cu litz wires
Material wire insulation	PE
Single wire, color	white, yellow, blue, orange
Thickness, outer sheath	approx. 0.90 mm
Overall twist	Star quad
Optical shield covering	85 %
Insulation resistance	≥ 500 MΩ*km
Coupling resistance	≤ 20.00 mΩ/m (at 10 MHz)
Loop resistance	≤ 120.00 Ω/km
Wave impedance	100 Ω ±15 Ω (at 100 MHz)
Nominal voltage, cable	600 V
Test voltage Core/Core	2000 V (50 Hz, 1 min.)
Test voltage Core/Shield	2000.00 V (50 Hz, 1 min.)
Minimum bending radius, fixed installation	3 x D
Minimum bending radius, flexible installation	7 x D
Smallest bending radius, fixed installation	20 mm
Smallest bending radius, movable installation	46 mm
Near end crosstalk attenuation (NEXT)	80 dB (with 1 MHz)
	76 dB (at 4 MHz)
	70 dB (at 10 MHz)
	65 dB (at 16 MHz)
	63 dB (at 20 MHz)
	60 dB (at 31.25 MHz)
	55 dB (at 62.5 MHz)
	50 dB (at 100 MHz)
Shield attenuation	2.1 dB (with 1 MHz)
	4 dB (at 4 MHz)
	6.3 dB (at 10 MHz)
	8 dB (at 16 MHz)
	9 dB (at 20 MHz)
	11.4 dB (at 31.25 MHz)
	16.5 dB (at 62.5 MHz)
	21.3 dB (at 100 MHz)
Flame resistance	according to UL 1685 (CSA FT 4)
Resistance to oil	Resistant to oil to a limited extent
Other resistance	UV resistant (According to UL 1581, Section 1200)
Ambient temperature (operation)	-40 °C ... 70 °C (cable, fixed installation)
	-40 °C ... 70 °C (Cable, flexible installation)
Ambient temperature (installation)	-20 °C ... 60 °C

Environmental and real-life conditions

Ambient conditions

Degree of protection	IP20 (RJ45 connector)
	IP67 (M8 connectors)

Standards and regulations

M8

Standard designation	M8 connector
Standards/specifications	IEC 61076-2-104

Drawings

Circuit diagram



Dimensional drawing

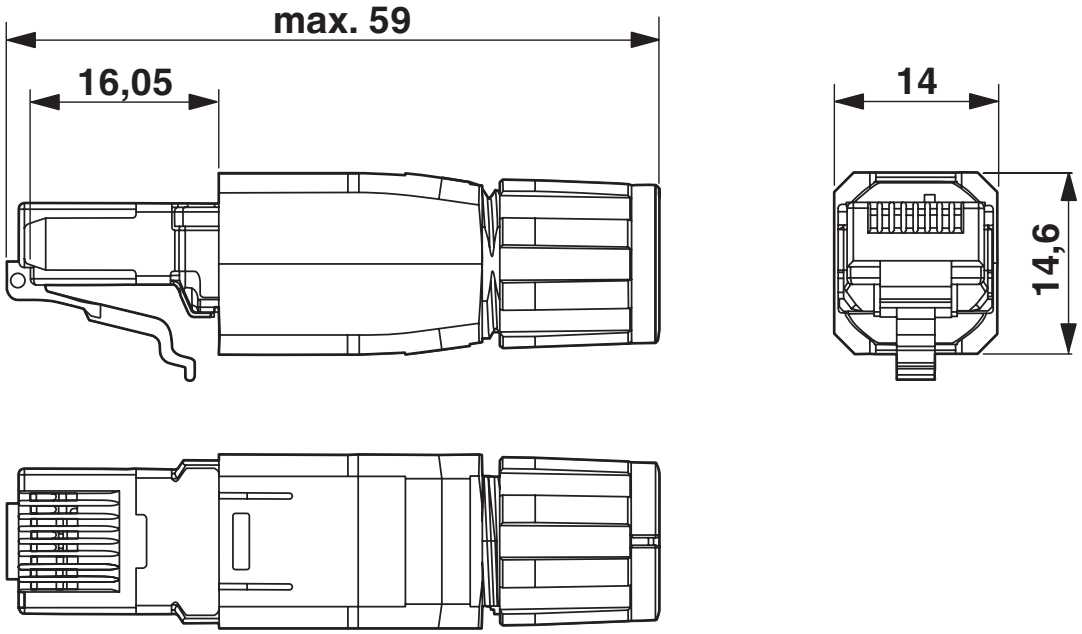

RJ45 connector, IP20

Schematic diagram

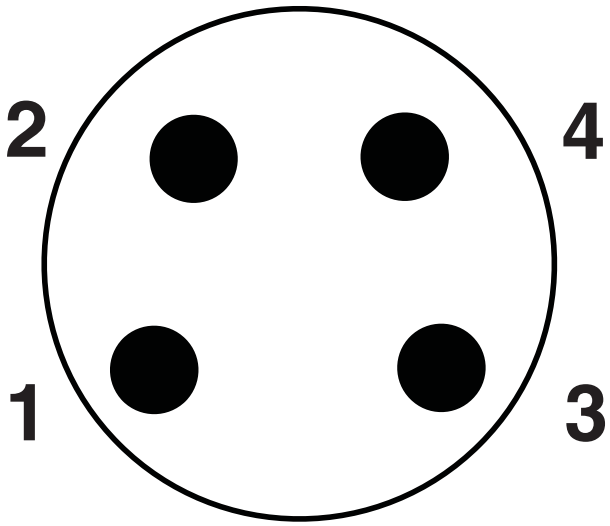

Pin assignment M8 plug, 4-pos., view male side

Dimensional drawing

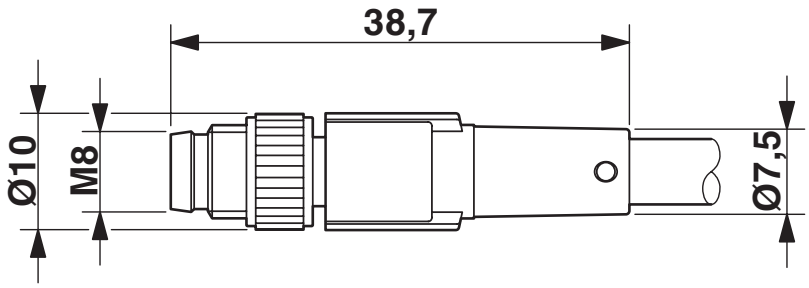

M8 x 1 male plug, straight version

Classifications

ECLASS

ECLASS-11.0	27060307
ECLASS-12.0	27060307
ECLASS-13.0	27060307

ETIM

ETIM 9.0	EC001855

UNSPSC

UNSPSC 21.0	26121600

Environmental product compliance

EU RoHS

Fulfills EU RoHS substance requirements	Yes, No exemptions

China RoHS

Environment friendly use period (EFUP)	EFUP-E
	No hazardous substances above the limits

EU REACH SVHC

REACH candidate substance (CAS No.)	No substance above 0.1 wt%

Phoenix Contact 2024 © - all rights reserved
https://www.phoenixcontact.com

Phoenix Contact USA
586 Fulling Mill Road
Middletown, PA 17057, United States
(+717) 944-1300
info@phoenixcon.com