EV7747DQ-00A

2x20W Stereo Single Ended Class D Audio Amplifier Evaluation Board

The Future of Analog IC Technology

DESCRIPTION

The EV7747DQ-00A is the evaluation board for the MP7747, a 20W mono Class D Audio Amplifier. It is one of MPS' products of fully integrated audio amplifiers which dramatically reduce solution size by integrating the following:

- 250mΩ power MOSFETs
- Startup / Shutdown pop elimination
- Short circuit protection circuits

The MP7747 utilizes a single ended output structure capable of delivering 20W into 4Ω speakers. MPS Class D Audio Amplifiers exhibit the high fidelity of a Class A/B amplifier at high efficiency. The circuit is based on the MPS' AAM™ proprietary variable frequency topology that delivers excellent linearity, fast response time and operates on a single power supply.

ELECTRICAL SPECIFICATIONS

Parameter	Symbol	Value	Units
Supply Voltage	V_{DD}	9.5~36	V

FEATURES

- 2 x 20W Output at V_{DD} = 24V into a 4Ω load
- THD+N = 0.02% at 1W, 8Ω, 1kHz
- 91% Efficiency at 20W and V_{DD}=24V with 4Ω load
- Low Noise (103μV Typical)
- 9.5V to 36V Operation from a Single Supply

APPLICATIONS

- Flat Panel TV
- Portable Docking Stations
- Surround Sound DVD Systems
- Televisions
- Multimedia Computers
- Home Stereo Systems

"MPS" and "The Future of Analog IC Technology" are Registered Trademarks of Monolithic Power Systems, Inc.

AAM (Analog Adaptive Modulation) is a Trademark of Monolithic Power Systems, Inc.

EV7747DQ-00A EVALUATION BOARD



(L x W x H) 3.5" x 2.5" x 1.2"
9.0cm x 6.3cm x 3.0cm

Board Number	MPS IC Number
EV7747DQ-00A	MP7747DQ

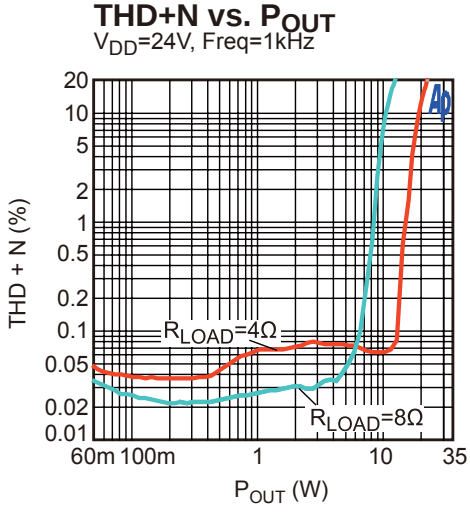

MPS Proprietary Information. Patent Protected. Unauthorized Photocopy and Duplication Prohibited.
© 2011 MPS. All Rights Reserved.

EVALUATION BOARD SCHEMATIC

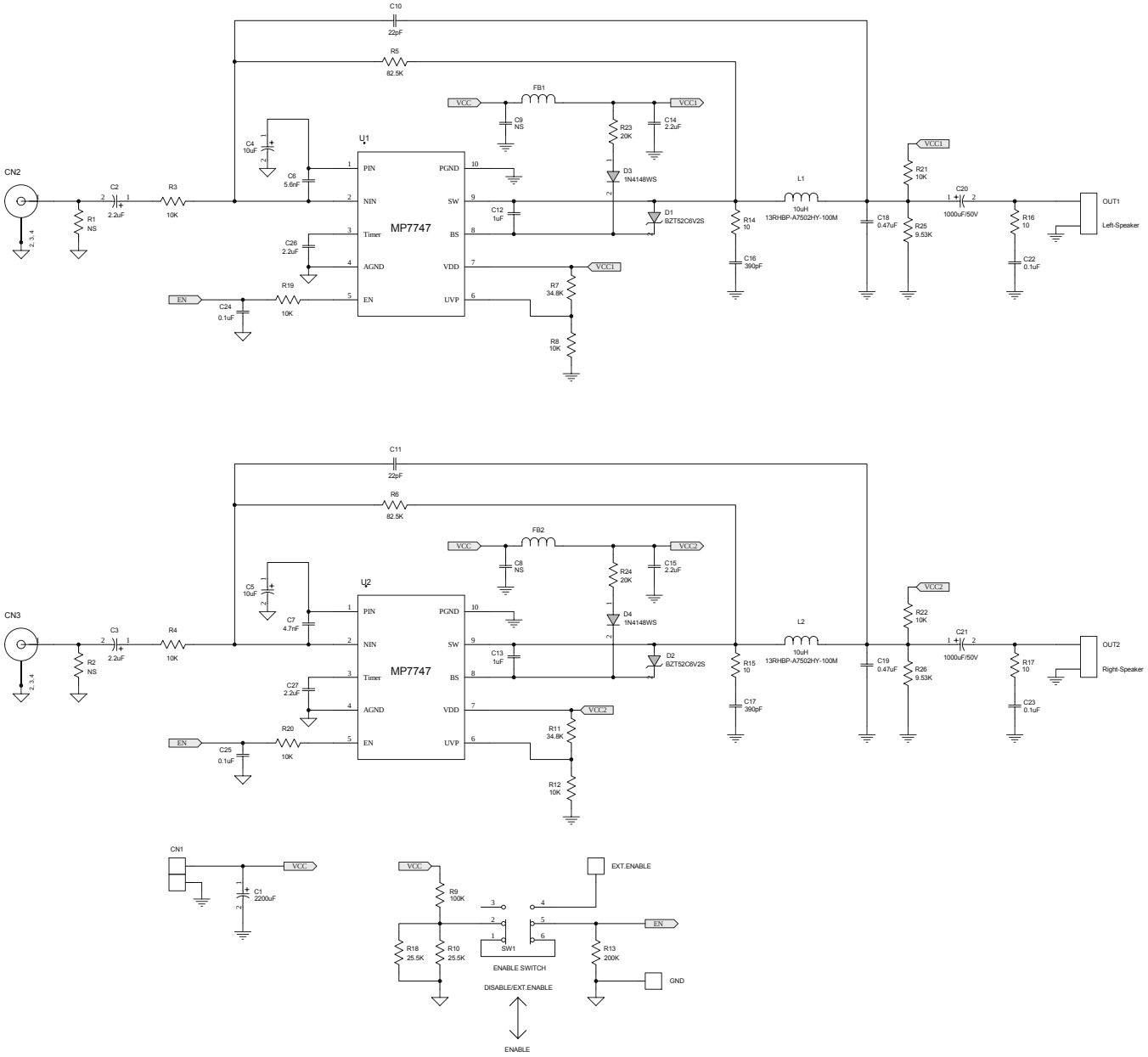

MPS Proprietary Information. Patent Protected. Unauthorized Photocopy and Duplication Prohibited.
© 2011 MPS. All Rights Reserved.

EV7747DQ-00A BILL OF MATERIALS

Qty	Ref	Value	Description	Package	Manufacturer	Manufacturer P/N
1	C1	2200μF	Electrolytic Capacitor; 50V	DIP	Rubycon	
2	C2, C3	2.2μF	Electrolytic Capacitor; 50V	DIP	Rubycon	
2	C4, C5	10μF	Electrolytic Capacitor; 50V	DIP	Rubycon	
1	C6	5.6nF	Ceramic Capacitor; 50V; X7R; 0603	0603	muRata	GRM188R71H562KA01
1	C7	4.7nF	Ceramic Capacitor; 50V; X7R; 0603	0603	muRata	GRM188R71H472KA01D
2	C8, C9	NS		0603		
2	C10, C11	22pF	Ceramic Capacitor; 50V; C0G; 0603	0603	TDK	C1608C0G1H220J
2	C12, C13	1μF	Ceramic Capacitor; 16V; X7R; 0805	0805	muRata	GRM21BR71C105KA01
2	C14, C15	2.2μF	Ceramic Capacitor; 50V; X7R; 1206	1206	muRata	GRM31CR71H225KA88L
2	C16, C17	390pF	Ceramic Capacitor; 50V; C0G; 0603	0603	muRata	GRM1885C1H391JA01D
2	C18, C19	0.47μF	CBB Capacitor; 50V	DIP	Panasonic	
2	C20, C21	1000μF	Electrolytic Capacitor; 50V	DIP	Rubycon	
2	C22, C23	0.1μF	Ceramic Capacitor; 50V; X7R; 0603	0603	muRata	GRM188R71H104KA93D
2	C24, C25	0.1μF	Ceramic Capacitor; 16V; X7R; 0603	0603	muRata	GRM188R71C104KA01D
2	C26, C27	2.2μF	Ceramic Capacitor; 10V; X7R; 0603	0603	muRata	GRM188R71A225KE15
2	D1, D2	BZT52C6V2S	Zener Diode; 6.2V; 5mA/200mW	SOD-323	Diodes	BZT52C6V2S-7-F
2	D3, D4	1N4148WS	Diode; 75V; 0.15A	SOD-323	Diodes	1N4148WS-7-F
2	FB1, FB2		Magnetic Bead	1206	LION	PB321611-320
2	L1, L2	10μH	Inductor; 10μH; 18mΩ; 3.61A	DIP	TOKO	13RHBP-A7502HY-100M
2	R1, R2	NS		0603		
8	R3, R4, R8, R12, R19, R20, R21,R22	10kΩ	Film Resistor; 1%	0603	Royalohm	0603F1002T5E
2	R5, R6	82.5kΩ	Film Resistor; 1%	0603	Yageo	RC0603FR-0782K5L
2	R7, R11	34.8kΩ	Film Resistor; 1%	0603	Yageo	RC0603FR-0734K8L
1	R9	100kΩ	Film Resistor; 1%	0603	Royalohm	0603F1003T5E
2	R10, R18	25.5kΩ	Film Resistor; 1%	0603	Yageo	RC0603FR-0725K5L
1	R13	200kΩ	Film Resistor; 5%	0603	Yageo	RC0603JR-07200KL
2	R14, R15	10Ω	Film Resistor; 1%	0603	Yageo	RC0603FR-0710RL
2	R16, R17	10Ω	Film Resistor; 1%	1206	Yageo	RC1206FR-0710RL

MPS Proprietary Information. Patent Protected. Unauthorized Photocopy and Duplication Prohibited.
© 2011 MPS. All Rights Reserved.

EV7747DQ-00A BILL OF MATERIALS (*Continued*)

Qty	Ref	Value	Description	Package	Manufacturer	Manufacturer P/N
2	R23, R24	20kΩ	Film Resistor; 1%	0603	Yageo	RC0603FR-0720KL
2	R25, R26	9.53kΩ	Film Resistor; 1%	0603	Yageo	RC0603FR-079K53L
1	SW1		DPDT Slide Switch	DIP	Any	
1	CN1		Connector; Red and Black		Any	
2	CN2, CN3		RCA Connector	DIP	Any	
2	OUT1, OUT2		Connector	DIP	Any	
2	U1, U2		Class D Audio Amplifier	QFN10	MPS	MP7747DQ

MPS Proprietary Information. Patent Protected. Unauthorized Photocopy and Duplication Prohibited.
© 2011 MPS. All Rights Reserved.

PRINTED CIRCUIT BOARD LAYOUT

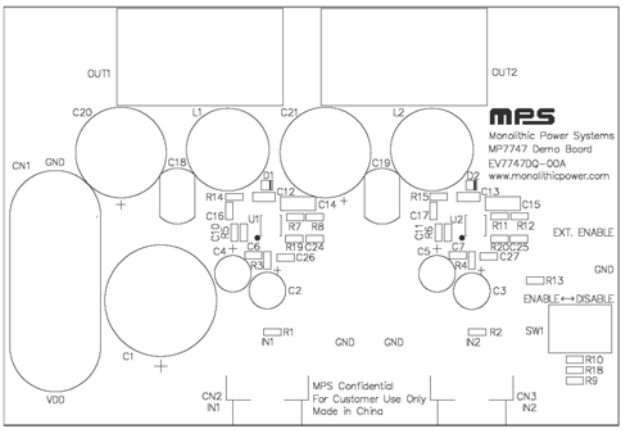

Figure 1—Top Silk Layer

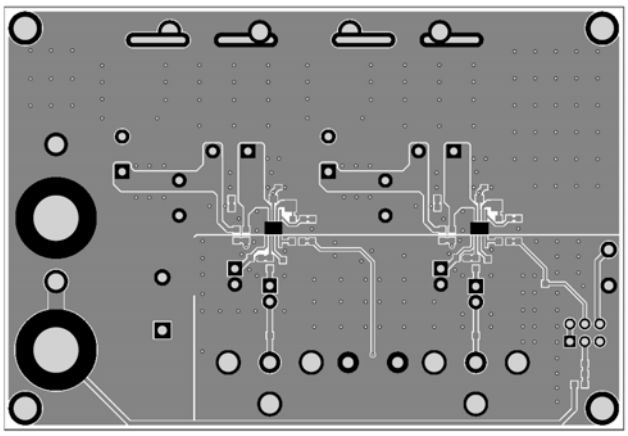

Figure 2—Top Layer

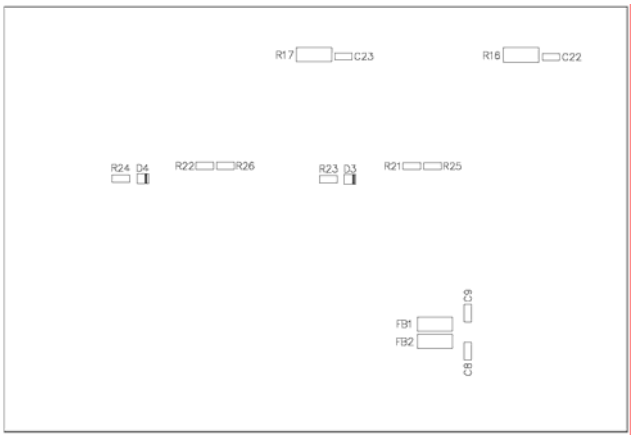

Figure 3—Bottom Silk Layer (Mirror)

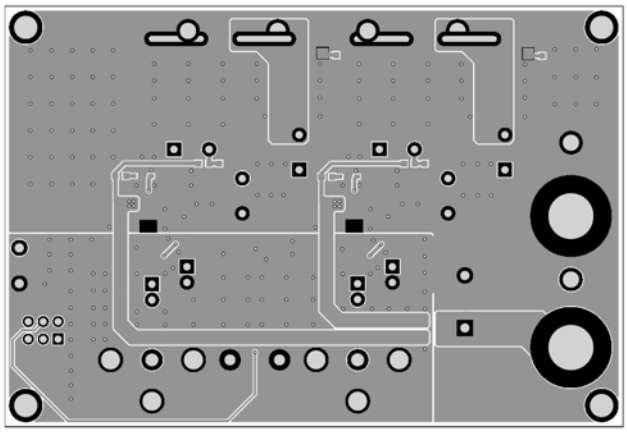

Figure 4—Bottom Layer (Mirror)

MPS Proprietary Information. Patent Protected. Unauthorized Photocopy and Duplication Prohibited.
© 2011 MPS. All Rights Reserved.

QUICK START GUIDE

This board is set up from the factory for 24V operation. To use with 36V (12V) power supply, adjust the components as specified in the 36V (12V) Operation Modifications section below. For more information, consult the MP7747 datasheet.

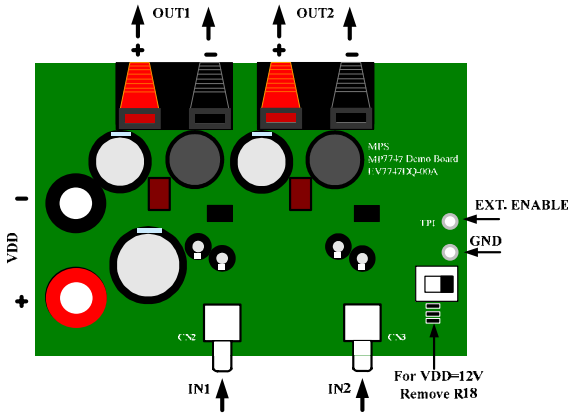

Figure 5—EV7747DQ-00A Connection Diagram

1. Power Requirements
    a. Power supply: 9.5V to 36V, 4.5A maximum.
    b. 0V to 1.5VRMS (max) audio signal source.
    c. Speaker: typically 4Ω to 8Ω;
2. Setup Condition for 24V Operation
    a. Adjust the power supply to 24V (do not turn on).
    b. Connect the outputs to the external speakers.
    c. Connect the power supply to the VDD terminals.
    d. Set the enable switch to the DISABLE position.
    e. Connect the audio input signal source to the amplifier inputs (CN2, CN3).
    f. Turn on the power supply.
3. 36V Operation Modifications
    a. Change C6 to 8.2nF and C7 to 6.8nF.
    b. Change R7 & R11 to 64.9k Ω to set 30V VDD shutdown voltage.
    c. Adjust the power supply to 36V (do not turn on).
    d. Do as step b~f specified in Section 2.
4. 12V Operation Modifications
    a. Change C6 to 3.3nF and C7 to 2.2nF.
    b. Change R7 & R11 to 15kΩ to set 10V VDD shutdown voltage.
    c. Remove R18 to make sure EN signal is high enough @ 12V VDD.
    d. Adjust the power supply to 12V (do not turn on).
    e. Do as step b~f specified in Section 2.
5. Music Turn-On Sequence
    Set the enable switch to the ENABLE position.
6. Music Turn-Off Sequence
    a. Set the enable switch to the DISABLE position.
    b. Turn off the power supply.

NOTICE: The information in this document is subject to change without notice. Please contact MPS for current specifications. Users should warrant and guarantee that third party Intellectual Property rights are not infringed upon when integrating MPS products into any application. MPS will not assume any legal responsibility for any said applications.

MPS Proprietary Information. Patent Protected. Unauthorized Photocopy and Duplication Prohibited.
© 2011 MPS. All Rights Reserved.