Data sheet | Item number: 721-435/001-000

THT male header; 1.0 x 1.0 mm solder pin; angled; 100% protected against mismating; Pin spacing 5 mm; 5-pole; light gray

www.wago.com/721-435/001-000

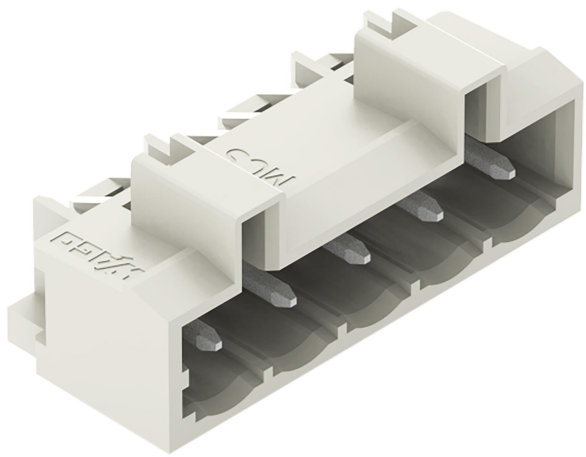

Color:

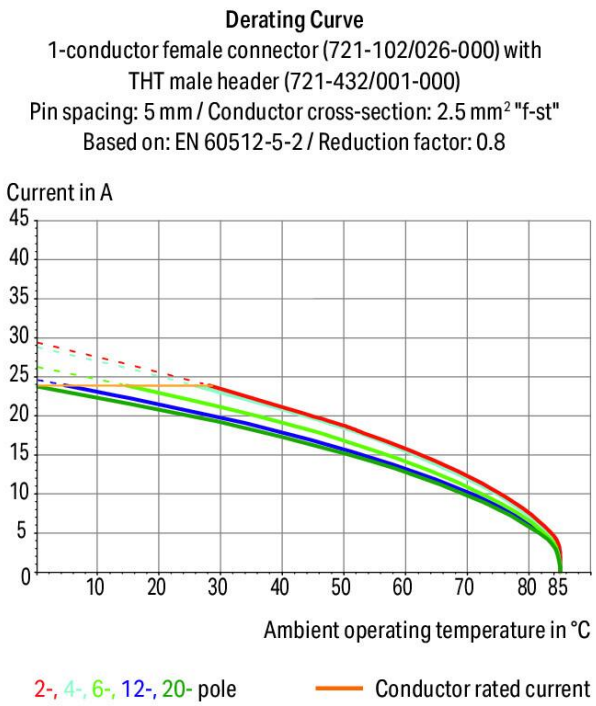

Subject to changes. Please also observe the further product documentation!

WAGO GmbH & Co. KG
Hansastr. 27
32423 Minden
Phone: +49571 887-0 | Fax: +49571 887-169
Email: info.de@wago.com | Web: www.wago.com

Do you have any questions about our products?
We are always happy to take your call at +49 (571) 887-44222.

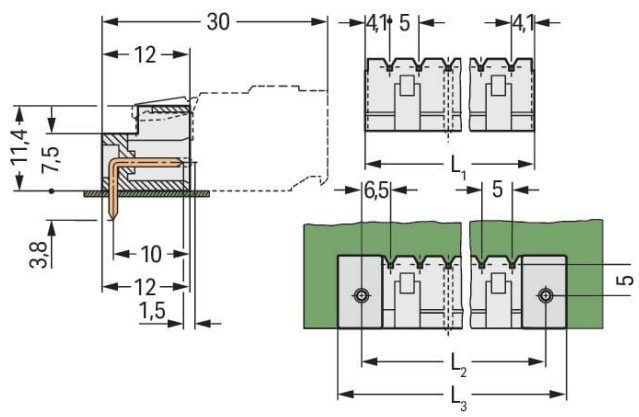

Dimensions in mm
L_1 = (pole no. – 1) x pin spacing + 8.2 mm
L_2 = L_1 + 5 mm
L_3 = L_2 + 7.4 mm

Item description

- Horizontal or vertical PCB mounting via straight or angled solder pins
- Pin cross-section: 1 x 1 mm
- 100 % protected against mismating
- With coding fingers

Data
Notes

Safety information	The *MCS – MULTI CONNECTION SYSTEM* includes connectors without breaking capacity in accordance with DIN EN 61984. When used as intended, these connectors must not be connected /disconnected when live or under load.When used as intended, these connectors must not be connected/disconnected when live or under load. The circuit design should ensure header pins, which can be touched, are not live when unmated.
Variants:	Other pole numbers 3.8 mm pin projection for male headers with straight solder pins Gold-plated or partially gold-plated contact surfaces Other versions (or variants) can be requested from WAGO Sales or configured at https://configurator.wago.com/.

Electrical data

Subject to changes. Please also observe the further product documentation!

WAGO GmbH & Co. KG
Hansastr. 27
32423 Minden
Phone: +49571 887-0 | Fax: +49571 887-169
Email: info.de@wago.com | Web: www.wago.com

Do you have any questions about our products?
We are always happy to take your call at +49 (571) 887-44222.

Ratings per IEC/EN

Ratings per	IEC/EN 60664-1
Nominal voltage (III/3)	320 V
Rated impulse voltage (III/3)	4 kV
Rated voltage (III/2)	320 V
Rated impulse voltage (III/2)	4 kV
Nominal voltage (II/2)	630 V
Rated surge voltage (II/2)	4 kV
Rated current	12 A
Legend (ratings)	(III / 2) ≙ Overvoltage category III / Pollution degree 2

Ratings per UL

Approvals per	UL 1059
Rated voltage UL (Use Group B)	300 V
Rated current UL (Use Group B)	10 A
Rated voltage UL (Use Group D)	300 V
Rated current UL (Use Group D)	10 A

Ratings per UL 1977

Rated voltage (UL 1977)	600 V
Rated current UL 1977	10 A

Ratings per CSA

Approvals per	CSA
Rated voltage CSA (Use Group B)	300 V
Rated current CSA (Use Group B)	10 A
Rated voltage CSA (Use Group D)	300 V
Rated current CSA (Use Group D)	10 A

Connection data

Total number of potentials	5
Number of connection types	1
Number of levels	1

Subject to changes. Please also observe the further product documentation!

WAGO GmbH & Co. KG
Hansastr. 27
32423 Minden
Phone: +49571 887-0 | Fax: +49571 887-169
Email: info.de@wago.com | Web: www.wago.com

Do you have any questions about our products?
We are always happy to take your call at +49 (571) 887-44222.

Connection 1

Pole number	5

Physical data

Pin spacing	5 mm / 0.197 inches
Width	28.2 mm / 1.11 inches
Height	15.2 mm / 0.598 inches
Height from the surface	11.4 mm / 0.449 inches
Depth	12 mm / 0.472 inches
Solder pin length	3.8 mm
Solder pin dimensions	1 x 1 mm
Drilled hole diameter with tolerance	1.4 $^{(+0.1)}$ mm

Mechanical Data

Variable coding	Yes
Anti-rotation protection	Yes

Plug-in connection

Contact type (pluggable connector)	Male connector/plug
Connector (connection type)	for PCB
Mismating protection	Yes
Plugging without loss of pin spacing	No
Mating direction to the PCB	0 °
Locking of plug-in connection	none

PCB contact

PCB contact	THT
Solder pin arrangement	over the entire male connector (in-line)
Number of solder pins per potential	1

Material data

Note (material data)	Information on material specifications can be found here
Color	light gray

Subject to changes. Please also observe the further product documentation!

WAGO GmbH & Co. KG
Hansastr. 27
32423 Minden
Phone: +49571 887-0 | Fax: +49571 887-169
Email: info.de@wago.com | Web: www.wago.com

Do you have any questions about our products?
We are always happy to take your call at +49 (571) 887-44222.

Material group	I
Insulation material	Polyamide (PA66)
Flammability class per UL94	V0
Contact material	Electrolytic copper (E_{Cu})
Contact plating	Tin
Fire load	0.034 MJ
Weight	1.8 g

Environmental requirements

Limit temperature range	-60 … +100 °C
Processing temperature	-35 … +60 °C

Commercial data

Product Group	3 (Multi Conn. System)
eCl@ss 10.0	27-44-04-02
eCl@ss 9.0	27-44-04-02
ETIM 8.0	EC002637
ETIM 7.0	EC002637
ECCN	NO DATA
PU (SPU)	200 pcs
Packaging type	box
Country of origin	PL
GTIN	4044918869591
Customs tariff number	85366930000

Environmental Product Compliance

RoHS Compliance Status	Compliant,No Exemption

Approvals / Certificates

General approvals

Logo	Approval	Additional Approval Text	Certificate name
	CB DEKRA Certification B.V.	IEC 61984	NL-39756/A1
	CCC CQC	GB/T 13140.1	CQC03003003013

Subject to changes. Please also observe the further product documentation!

WAGO GmbH & Co. KG
Hansastr. 27
32423 Minden
Phone: +49571 887-0 | Fax: +49571 887-169
Email: info.de@wago.com | Web: www.wago.com

Do you have any questions about our products?
We are always happy to take your call at +49 (571) 887-44222.

	CSA DEKRA Certification B.V.	C22.2	1466354
	KEMA/KEUR DEKRA Certification B.V.	EN 61984	71-121453
	UL Underwriters Laboratories Inc.	UL 1977	E45171
	UL Underwriters Laboratories Inc.	UL 1059	E45172

Declarations of conformity and manufacturer's declarations

Logo	Approval	Additional Approval Text	Certificate name
	Railway WAGO GmbH & Co. KG	-	Railway Ready

Approvals for marine applications

Logo	Approval	Additional Approval Text	Certificate name
	ABS American Bureau of Shipping	-	19-HG1869876-PDA
	DNV DNV GL SE	-	TAE000016Z

Counterpart

Item no.2721-105/026-000
1-conductor female connector; push-button; Push-in CAGE CLAMP®; 2.5 mm²; Pin spacing 5 mm; 5-pole; 100% protected against mismating; 2,50 mm²; light gray

www.wago.com/2721-105/026-000

Subject to changes. Please also observe the further product documentation!

WAGO GmbH & Co. KG
Hansastr. 27
32423 Minden
Phone: +49571 887-0 | Fax: +49571 887-169
Email: info.de@wago.com | Web: www.wago.com

Do you have any questions about our products?
We are always happy to take your call at +49 (571) 887-44222.

	Item no.2721-105/037-000 1-conductor female connector; push-button; Push-in CAGE CLAMP®; 2.5 mm²; Pin spacing 5 mm; 5-pole; 100% protected against mismating; Lateral locking levers; 2,50 mm²; light gray	www.wago.com/2721-105/037-000
	Item no.721-105/026-000 1-conductor female connector; CAGE CLAMP®; 2.5 mm²; Pin spacing 5 mm; 5-pole; 100% protected against mismating; 2,50 mm²; light gray	www.wago.com/721-105/026-000
	Item no.721-105/037-000 1-conductor female connector; CAGE CLAMP®; 2.5 mm²; Pin spacing 5 mm; 5-pole; 100% protected against mismating; Lateral locking levers; 2,50 mm²; light gray	www.wago.com/721-105/037-000
	Item no.722-205/026-000 1-conductor female connector, angled; CAGE CLAMP®; 2.5 mm²; Pin spacing 5 mm; 5-pole; 100% protected against mismating; 2,50 mm²; light gray	www.wago.com/722-205/026-000
	Item no.2721-105/031-000 1-conductor female connector; push-button; Push-in CAGE CLAMP®; 2.5 mm²; Pin spacing 5 mm; 5-pole; 100% protected against mismating; clamping collar; 2,50 mm²; light gray	www.wago.com/2721-105/031-000
	Item no.2721-105/026-000/134-000 1-conductor female connector; push-button; Push-in CAGE CLAMP®; 2.5 mm²; Pin spacing 5 mm; 5-pole; 100% protected against mismating; Strain relief plate; 2,50 mm²; light gray	www.wago.com/2721-105/026-000/134-000
	Item no.721-105/031-000 1-conductor female connector; CAGE CLAMP®; 2.5 mm²; Pin spacing 5 mm; 5-pole; 100% protected against mismating; clamping collar; 2,50 mm²; light gray	www.wago.com/721-105/031-000
	Item no.721-2105/026-000 2-conductor female connector; Push-in CAGE CLAMP®; 2.5 mm²; Pin spacing 5 mm; 5-pole; 100% protected against mismating; with integrated end plate; 2,50 mm²; light gray	www.wago.com/721-2105/026-000
	Item no.721-2105/026-000/134-000 2-conductor female connector; Push-in CAGE CLAMP®; 2.5 mm²; Pin spacing 5 mm; 5-pole; 100% protected against mismating; with integrated end plate; Strain relief plate; 2,50 mm²; light gray	www.wago.com/721-2105/026-000/134-000
	Item no.721-2105/037-000 2-conductor female connector; Push-in CAGE CLAMP®; 2.5 mm²; Pin spacing 5 mm; 5-pole; 100% protected against mismating; Lateral locking levers; 2,50 mm²; light gray	www.wago.com/721-2105/037-000
	Item no.722-105/026-000 1-conductor female connector, angled; CAGE CLAMP®; 2.5 mm²; Pin spacing 5 mm; 5-pole; 100% protected against mismating; 2,50 mm²; light gray	www.wago.com/722-105/026-000

Item no.2721-1105/037-000

Subject to changes. Please also observe the further product documentation!

WAGO GmbH & Co. KG
Hansastr. 27
32423 Minden
Phone: +49571 887-0 | Fax: +49571 887-169
Email: info.de@wago.com | Web: www.wago.com

Do you have any questions about our products?
We are always happy to take your call at +49 (571) 887-44222.

1-conductor female connector; lever; Push-in CAGE CLAMP®; 2.5 mm²; Pin spacing 5 mm; 5-pole; 100% protected against mismating, coding finger; Lateral locking levers; 2,50 mm²; light gray

www.wago.com/2721-1105/037-000

Item no.2721-1107/037-000
1-conductor female connector; lever; Push-in CAGE CLAMP®; 2.5 mm²; Pin spacing 5 mm; 7-pole; 100% protected against mismating, coding finger; Lateral locking levers; 2,50 mm²; light gray

www.wago.com/2721-1107/037-000

Optional accessories

Marking accessories

Marking strip

Item no.: 210-833
Marking strips; 25 m on roll; 6 mm wide; plain; Self-adhesive; white

www.wago.com/210-833

Item no.: 210-834
Marking strips; on reel; 5 mm wide; plain; Self-adhesive; white

www.wago.com/210-834

Coding

Coding

Item no.: 231-129
Coding key; snap-on type; light gray

www.wago.com/231-129

Downloads

Documentation

Additional Information

Technical Section Technical explanations	2019 年4月3日	pdf 2.1 MB	Download

CAD/CAE-Data

CAD data

2D/3D Models 721-435/001-000	URL	Download

CAE data

EPLAN Data Portal 721-435/001-000	URL	Download
ZUKEN Portal 721-435/001-000	URL	Download

Subject to changes. Please also observe the further product documentation!

WAGO GmbH & Co. KG
Hansastr. 27
32423 Minden
Phone: +49571 887-0 | Fax: +49571 887-169
Email: info.de@wago.com | Web: www.wago.com

Do you have any questions about our products?
We are always happy to take your call at +49 (571) 887-44222.

EPLAN Data Portal 721-435/001-000	URL	Download

PCB Design

Symbol and Footprint via Ultra Librarian 721-435/001-000	URL	Download

CAx data for your PCB design, consisting of "schematic symbols and PCB footprints", allow easy integration of the WAGO component into your development environment.

Supported formats:

- Accel EDA 14 & 15
- Altair
- Altium 6 to current version
- Autodesk Fusion 360
- Cadence Allegro
- DesignSpark
- Eagle Libraries
- KiCad
- Mentor Graphics
- BoardStation
- Mentor Graphics Design Architect
- Mentor Graphics Design
- Expedition 99 and 2000
- OrCAD 9.X PCB and Capture
- PADS PowerPCB 3, 3.5, 4.X, and 5.X
- PADS PowerPCB and PowerLogic 3.0
- PCAD 2000, 2001, 2002, 2004, and 2006
- Pulsonix 8.5 or newer
- STL
- 3D STEP
- TARGET 3001!
- View Logic ViewDraw
- Quadcept
- Zuken CadStar 3 and 4
- Zuken CR-5000 and CR-8000
- Zuken eCADSTAR 2020 and 2021Zuken CR-5000 and CR-8000

PCB Component Libraries (EDA), PCB CAD Library Ultra Librarian

Symbol and Footprint via SamacSys 721-435/001-000

WAGO GmbH & Co. KG
Hansastr. 27
32423 Minden
Phone: +49571 887-0 | Fax: +49571 887-169
Email: info.de@wago.com | Web: www.wago.com

Do you have any questions about our products?
We are always happy to take your call at +49 (571) 887-44222.

Symbol and Footprint via SamacSys 721-435/001-000

URL Download

CAx data for your PCB design, consisting of "schematic symbols and PCB footprints", allow easy integration of the WAGO component into your development environment.

Supported formats:

- 3D (stp)
- Altium
- CADSTAR
- Capture
- CircuitStudio
- CR-5000
- CR-8000
- DEHDL
- DesignSpark PCB
- DesignSpark PCB PRO
- DipTrace
- EAGLE
- Easy-PC
- EasyEDA
- eCADSTAR
- KiCad
- OrCAD_Allegro16
- PADS
- Proteus
- Pulsonix
- Quadcept
- SOLIDWORKS PCB
- TARGET 3001!
- xDX Designer
- Xpedition

PCB Component Libraries (EDA), PCB CAD Library SamacSys Electronic Component Search Engine

Asset Administration Shell

Asset Administration Shell 721-435/001-000	URL	Download

Subject to changes. Please also observe the further product documentation!

WAGO GmbH & Co. KG
Hansastr. 27
32423 Minden
Phone: +49571 887-0 | Fax: +49571 887-169
Email: info.de@wago.com | Web: www.wago.com

Do you have any questions about our products?
We are always happy to take your call at +49 (571) 887-44222.

Environmental Product Compliance

Compliance Search

Environmental Product Compliance 721-435/001-000 THT male header; 1.0 x 1.0 mm solder pin; angled; 100% protected against mismating; Pin spacing 5 mm; 5-pole; light gray	URL	Download

Installation Notes

Coding

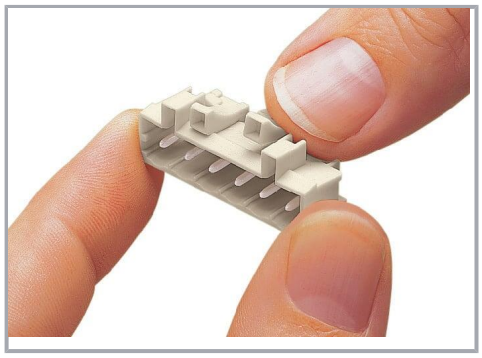

Coding a male header – fitting coding key(s).

Product family

MCS MIDI
Show all products from the family

Subject to changes. Please also observe the further product documentation!

WAGO GmbH & Co. KG
Hansastr. 27
32423 Minden
Phone: +49571 887-0 | Fax: +49571 887-169
Email: info.de@wago.com | Web: www.wago.com

Do you have any questions about our products?
We are always happy to take your call at +49 (571) 887-44222.