CAPAROC PM S-R EX - Feed-in module

1344363

https://www.phoenixcontact.com/us/products/1344363

Please be informed that the data shown in this PDF document is generated from our online catalog. Please find the complete data in the user documentation. Our general terms of use for downloads are valid.



Power module with status output and reset input for supplying the CAPAROC circuit breaker system with 12 V DC or 24 V DC. EX e approval for zone 2. For DIN rail installation via the CAPAROC current rails.

Your advantages

- The customizable standard, thanks to individual combinations of the future-proof modular system
- Easy operation for everyone through tool-free assembly, uninterrupted installation, and transparent operating state
- Strikingly simple design-in with extensive support from the selection up to digital services

Commercial data

Item number	1344363
Packing unit	1 pc
Minimum order quantity	1 pc
Sales key	CL11
Product key	CLA231
GTIN	4063151658403
Weight per piece (including packing)	129 g
Weight per piece (excluding packing)	91.9 g
Customs tariff number	85363010
Country of origin	DE

Technical data

Notes

General

Note	LABS release – in accordance with test specification VW PV 3. 10.7:2005-0
	When connecting the conductor, make sure that the CAPAROC modules are not pulled apart due to tensile force. Gaps must not be created between the modules.
	Observe the specified conditions for use in potentially explosive areas. Install the device in a suitable approved housing with at least IP54 degree of protection that meets the requirements of IEC/EN 60079-0. Also observe the requirements of IEC/EN 60079-14.

Product properties

Product type	Device circuit breakers
Product family	CAPAROC
Type	Plug-in module
Number of slots	2

Insulation characteristics

Protection class	III
Pollution degree	2

Electrical properties

General

Operating voltage	10 V DC ... 30 V DC
Rated voltage	12 V DC
	24 V DC
Rated current I_N	45 A DC (Total current input)
Rated surge voltage	0.5 kV
Tripping method	E (electronic)
Dielectric strength	35 V DC (Load circuit)
Efficiency	> 99 %
Closed circuit current I_0	typ. 9 mA (no load at 24 V)
Power dissipation	typ. 0.22 W (no load at 24 V)
	< 1.5 W (in nominal operation at 24 V and 45 A)
Temperature derating	45 A (Total current at 40°C)
	30 A (Total current at 65 °C)
MTBF (IEC 61709, SN 29500)	18886912.65 h (at 25 °C with 21 % load)
	5907048.64 h (at 40°C with 34.25% load)
	933563.97 h (at 40°C with 100% load)
Voltage drop	0.03 V (at 45 A)

Load circuit

Undervoltage switch-off	≤ 9.2 V DC (active)
	≥ 10.2 V DC (inactive)
Overvoltage switch-off	≥ 30.5 V DC (active)
	≤ 29.5 V DC (inactive)

Reset

Input voltage range	7 V DC ... 30 V DC (Reset with falling edge)
Current consumption	typ. 0.5 mA (at 24 V DC)
Pulse length	≥ 50 ms
Stripping length	8 mm
Conductor cross-section rigid	0.2 mm² ... 1.5 mm²
Conductor cross-section AWG	24 ... 16
Conductor cross-section, flexible, with ferrule, with plastic sleeve	0.2 mm² ... 0.75 mm²
Conductor cross-section flexible, with ferrule without plastic sleeve	0.2 mm² ... 1.5 mm²

Status output

Output voltage	max. 30 V DC (Input voltage ±5% in the event of no error)
	0 V DC (Error)
Output current	max. 20 mA
Stripping length	8 mm
Conductor cross-section rigid	0.2 mm² ... 1.5 mm²
Conductor cross-section AWG	24 ... 16
Conductor cross-section, flexible, with ferrule, with plastic sleeve	0.2 mm² ... 0.75 mm²
Conductor cross-section flexible, with ferrule without plastic sleeve	0.2 mm² ... 1.5 mm²

Status output

Output voltage	max. 30 V DC (Input voltage ±5% when I >80% at at least one channel)
Output current	max. 20 mA
Stripping length	8 mm
Conductor cross-section rigid	0.2 mm² ... 1.5 mm²
Conductor cross-section AWG	24 ... 16
Conductor cross-section, flexible, with ferrule, with plastic sleeve	0.2 mm² ... 0.75 mm²
Conductor cross-section flexible, with ferrule without plastic sleeve	0.2 mm² ... 1.5 mm²

Connection data

Main circuit IN+

Connection method	Push-in connection
Stripping length	18 mm
Conductor cross-section rigid	0.5 mm² ... 16 mm²
Conductor cross-section AWG	20 ... 8
Conductor cross-section, flexible, with ferrule, with plastic sleeve	0.5 mm² ... 16 mm²

Conductor cross-section flexible, with ferrule without plastic sleeve	0.5 mm² ... 16 mm²

Main circuit IN-

Connection method	Push-in connection
Stripping length	18 mm
Conductor cross-section rigid	0.5 mm² ... 16 mm²
Conductor cross-section AWG	20 ... 8
Conductor cross-section, flexible, with ferrule, with plastic sleeve	0.5 mm² ... 16 mm²
Conductor cross-section flexible, with ferrule without plastic sleeve	0.5 mm² ... 16 mm²

Interfaces

Maximum system extension	≤ 20 (CAPAROC modules alignable)

Signaling

Power (PWR) LED green	lit (with no channel errors)
	lit (Supply voltage in the nominal range)
	flashing (3 x on deactivation of programming lock)
Power (PWR) LED red	lit (Supply voltage outside the nominal range)
Power (PWR) LED yellow	flashing (3 x on activation of programming lock)
Green signal LED	lit (with no channel errors)
	lit (Supply voltage in the nominal range)
Yellow signal LED	lit (when I > 80% at at least one channel)
Red signal LED	lit (with at least one channel error)
	lit (Supply voltage outside the nominal range)

Dimensions

Dimensional drawing	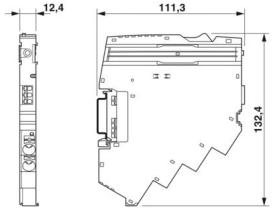
Width	12.4 mm
Height	132.4 mm
Depth	111.3 mm (incl. DIN rail 7.5 mm)

Material specifications

Color	light gray (RAL 7035)
Material	PA 6
	PA 6
	PA 6
	PC
Flammability rating according to UL 94	V-0

Environmental and real-life conditions

Ambient conditions

Degree of protection	IP20
Ambient temperature (operation)	-30 °C ... 65 °C
Ambient temperature (storage/transport)	-40 °C ... 70 °C
Altitude	≤ 4000 m (amsl)
Humidity test	96 h, 95 % RH, 40 °C
Shock (operation)	30g (11 ms period, half-sine shock pulse, according to IEC 60068-2-27)
	25g (6 ms duration, half-sine shock pulse in accordance with IEC 60068-2-27, continuous shock)
Vibration (operation)	5g (10 Hz ... 150 Hz / 10 cycles / axis / X, Y, Z)

Approvals

UL approval

Identification	UL/C-UL Listed UL 508
	UL 121201 Class I, Division 2, Groups A, B, C, D, T4A

ATEX

Identification	TÜV 22 ATEX 8874 X
	II 3G Ex ec IIC T4 Gc

IECEx

Identification	IECEx TUR 22.0049X
	II 3G Ex ec IIC T4 Gc

UKCA Ex (UKEX)

Identification	TÜV 22 UKEX 7109 X
	II 3G Ex ec IIC T4 Gc

Corrosive gas test

Identification	ISA S71.04.2013 G3 Harsh Group A

Standards and regulations

Standards/specifications	EN 61000-6-2
Note	EMC – Immunity for industrial areas
Standards/specifications	EN 61000-6-3
Note	EMC – Emission for residential, business and commercial properties and small operations
Standards/specifications	EN 60068-2-78
Note	Environmental influences – Moisture and heat, constant
Standards/specifications	EN 50178
Note	Equipping power installations with electronic equipment
Standards/specifications	EN 60068-2-27
Note	Environmental influences – Shocks

Standards/specifications	IEC 60079-7
Note	Explosive atmospheres – Part 7: Equipment protection by increased safety “e”
Standards/specifications	IEC 60079-0
Note	Explosive atmospheres – Part 0: Equipment – General requirements

Mounting

Mounting type	pluggable onto CAPAROC CR… current rail

Drawings

Dimensional drawing

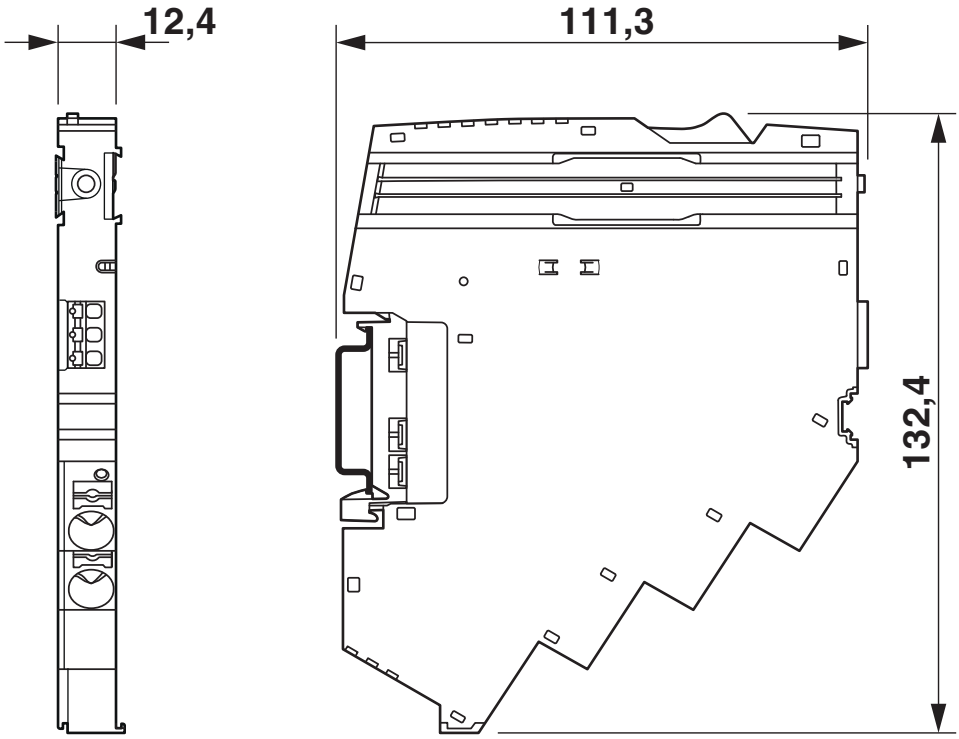

Schematic diagram

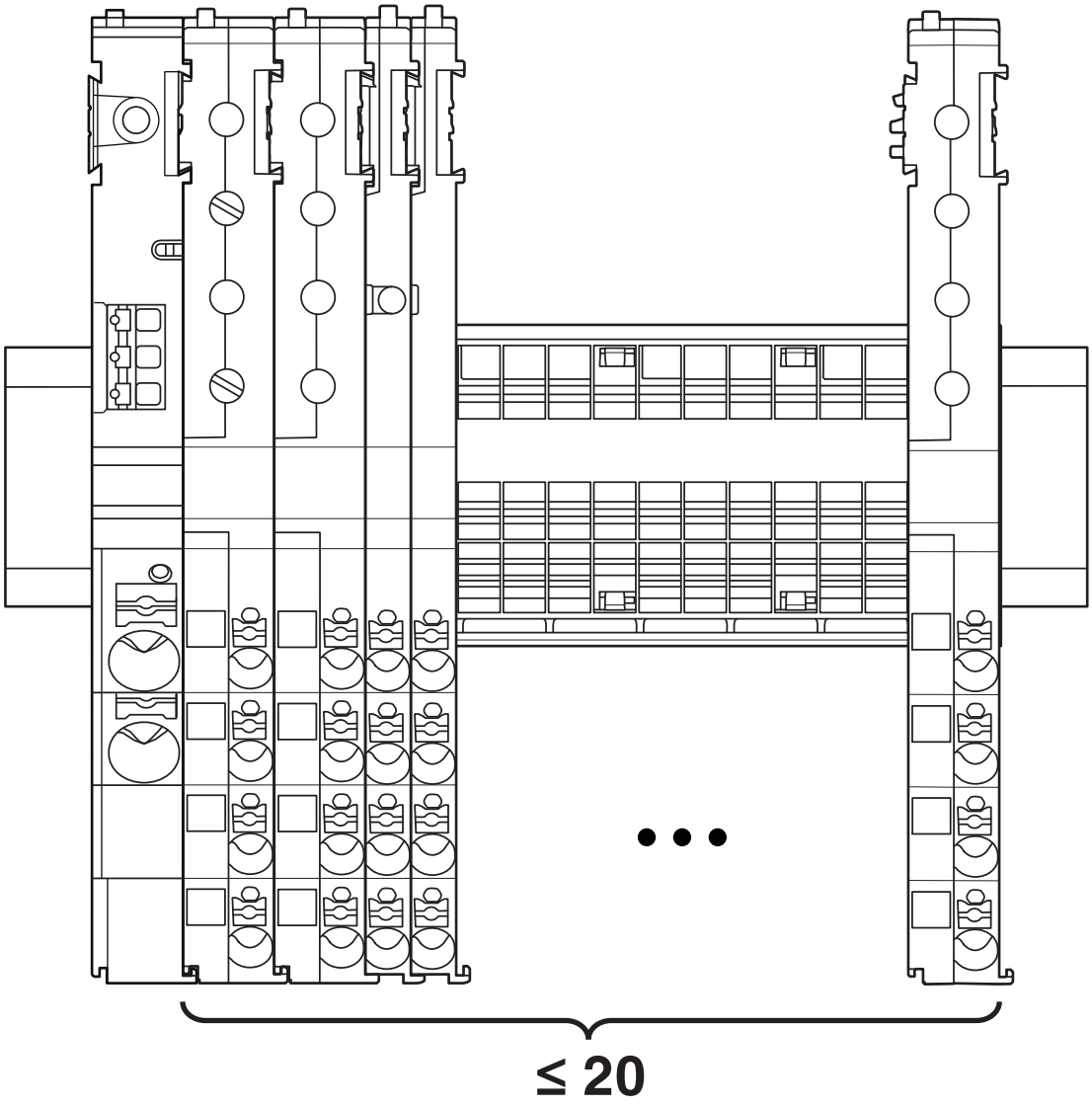

When using the power module with status output and reset input (CAPAROC PM S-R), max. 20 circuit breaker modules can be set. Any number of extra potential distribution modules can be added.

Diagram

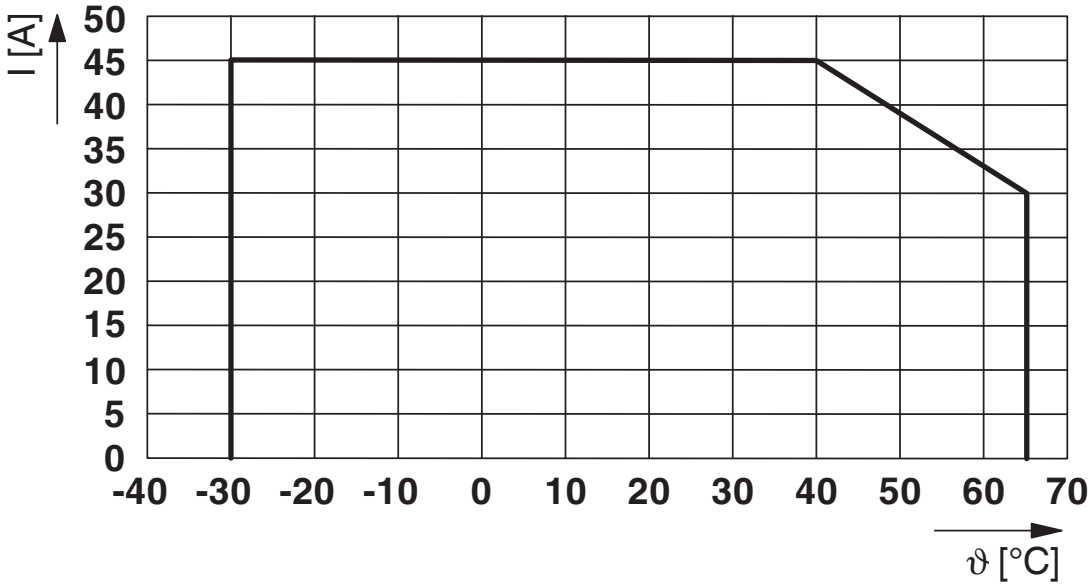

Max. permissible current in relation to the ambient temperature

Block diagram

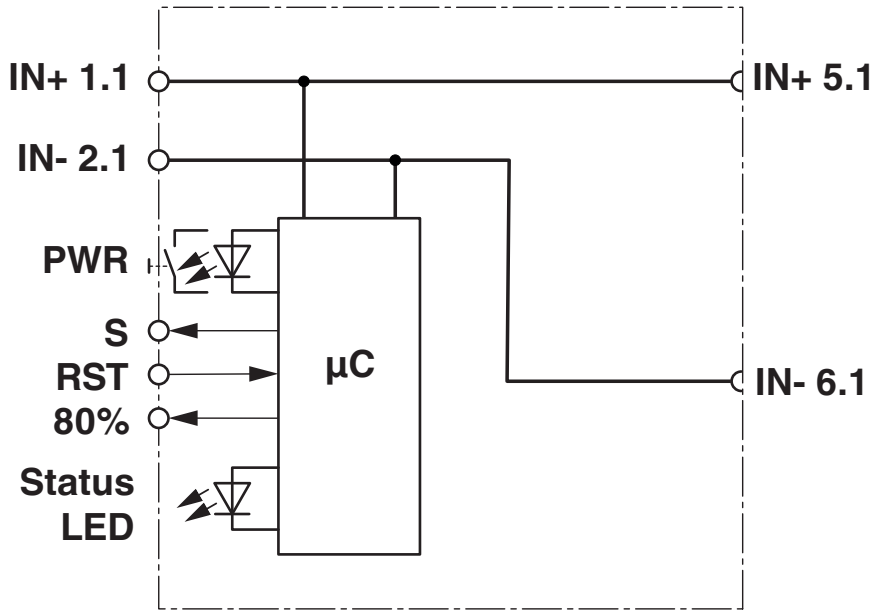

Approvals

To download certificates, visit the product detail page: https://www.phoenixcontact.com/us/products/1344363

UL Listed
Approval ID: E123528

cUL Listed
Approval ID: E123528

IECEx
Approval ID: IECEx TUR 22.0049X

cUL Listed
Approval ID: FILE E 483407

UL Listed
Approval ID: FILE E 483407

ATEX
Approval ID: TÜV 22 ATEX 8874 X

UKCA-EX
Approval ID: TÜV 22 UKEX 7109 X

Classifications

ECLASS

ECLASS-13.0	27140401
ECLASS-15.0	27140401

ETIM

ETIM 9.0	EC003538

Environmental product compliance

EU RoHS

Fulfills EU RoHS substance requirements	Yes
Exemption	7(a), 7(c)-I

China RoHS

Environment friendly use period (EFUP)	EFUP-50
	An article-related China RoHS declaration table can be found in the download area for the respective article under "Manufacturer declaration". For all articles with EFUP-E, no China RoHS declaration table issued and required.

EU REACH SVHC

REACH candidate substance (CAS No.)	Lead(CAS: 7439-92-1)
	2,2',6,6'-tetrabromo-4,4'-isopropylidenediphenol(CAS: 79-94-7)
SCIP	2f4d0d38-d708-41af-8858-925d40acf053

Phoenix Contact 2025 © - all rights reserved
https://www.phoenixcontact.com

Phoenix Contact USA
586 Fulling Mill Road
Middletown, PA 17057, United States
(+717) 944-1300
info@phoenixcon.com