Optocoupler, Phototriac Output, Non-Zero Crossing, High dV/dt, Low Input Current, SOP-4 Package



22995

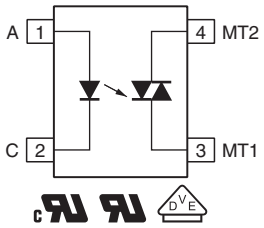

FEATURES

- Flat 2.0 mm SOP-4 package
- High static dV/dt 1000 V/µs
- High input sensitivity I_{FT} = 10 mA
- 100 mA on-state current
- 800 V peak off-state blocking voltage
- Isolation rated voltage 3750 V_{RMS}
- Material categorization: for definitions of compliance please see www.vishay.com/doc?99912

Pb-free

e3

RoHS COMPLIANT

DESIGN SUPPORT TOOLS

click logo to get started

3D Models Available

Design Tools Available

Related Documents

DESCRIPTION

The VOT8121AM consists of a GaAs IRLED optically coupled to a photosensitive TRIAC packaged in a board space saving tiny flat SOP-4 package.

The VOT8121AM isolates low-voltage logic from 120 V_{AC}, 240 V_{AC}, and 380 V_{AC} lines to control resistive, inductive, or capacitive loads including motors, solenoids, high current thyristors or TRIAC and relays.

APPLICATIONS

- Power TRIAC driver in solid-state relays
- 3-phase AC equipment
- Motor control
- Industrial control
- White goods / household equipment

AGENCY APPROVALS

- UL 1577
- cUL
- DIN EN 60747-5-5 (VDE 0884-5), available with option "V"

ORDERING INFORMATION

V	O	T	8	1	2	1	A	M	-	V	T	#
PART NUMBER										VDE OPTION	TAPE AND REEL	

AGENCY CERTIFIED/PACKAGE	TRIGGER CURRENT, I_{FT} (mA)
UL, cUL	**10**
SOP-4	VOT8121AM-T
SOP-4, 180° orientation	VOT8121AM-T2
VDE, UL, cUL	**10**
SOP-4	VOT8121AM-VT
SOP-4, 180° orientation	VOT8121AM-VT2

For technical questions, contact: optocoupleranswers@vishay.com

THIS DOCUMENT IS SUBJECT TO CHANGE WITHOUT NOTICE. THE PRODUCTS DESCRIBED HEREIN AND THIS DOCUMENT ARE SUBJECT TO SPECIFIC DISCLAIMERS, SET FORTH AT www.vishay.com/doc?91000

ABSOLUTE MAXIMUM RATINGS (T_{amb} = 25 °C, unless otherwise specified)				
PARAMETER	**TEST CONDITION**	**SYMBOL**	**VALUE**	**UNIT**
INPUT				
Reverse voltage		V_R	6	V
Forward current		I_F	50	mA
Power dissipation		P_{diss}	70	mW
OUTPUT				
Peak off-state voltage		V_{DRM}	800	V
RMS on-state current		$I_{T(RMS)}$	100	mA
Power dissipation		P_{diss}	300	mW
Peak repetitive surge current	PW = 1 ms, 120 pps	I_{TSM}	1	A
COUPLER				
Storage temperature range		T_{stg}	-55 to +150	°C
Ambient temperature range		T_{amb}	-55 to +110	°C
Total power dissipation		P_{diss}	330	mW
Soldering temperature	For 10 s	T_{sld}	260	°C

Note

- Stresses in excess of the absolute maximum ratings can cause permanent damage to the device. Functional operation of the device is not implied at these or any other conditions in excess of those given in the operational sections of this document. Exposure to absolute maximum ratings for extended periods of the time can adversely affect reliability.
  This phototriac should not be used to drive a load directly. It is intended to be a trigger device only

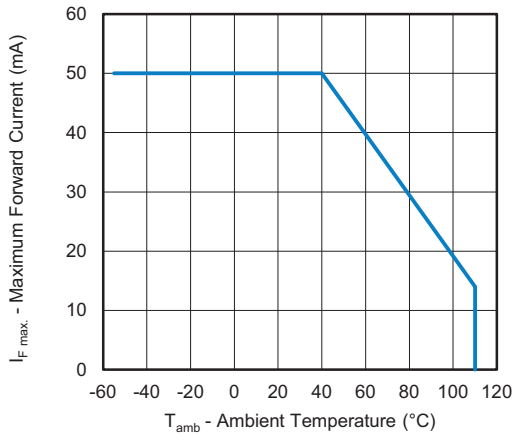

Fig. 1 - Maximum Forward Current vs. Ambient Temperature

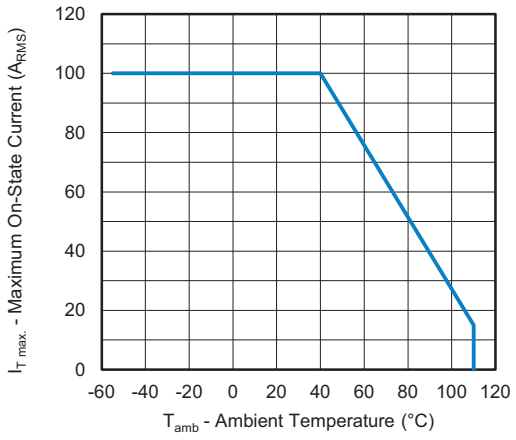

Fig. 2 - Maximum On-State Current vs. Ambient Temperature

For technical questions, contact: optocoupleranswers@vishay.com
THIS DOCUMENT IS SUBJECT TO CHANGE WITHOUT NOTICE. THE PRODUCTS DESCRIBED HEREIN AND THIS DOCUMENT ARE SUBJECT TO SPECIFIC DISCLAIMERS, SET FORTH AT www.vishay.com/doc?91000

ELECTRICAL CHARACTERISTICS (T_{amb} = 25 °C, unless otherwise specified)						
PARAMETER	**TEST CONDITION**	**SYMBOL**	**MIN.**	**TYP.**	**MAX.**	**UNIT**
INPUT						
Forward voltage	I_F = 20 mA	V_F	-	1.15	1.5	V
Reverse current	V_R = 6 V	I_R	-	-	10	µA
OUTPUT						
Off-state current	V_{DRM} = 800 V	I_{DRM}	-	-	0.1	µA
On-state voltage	I_T = 100 mA peak	V_{TM}	-	1.7	3	V
Holding current		I_H	-	250	-	µA
Critical rate of rise of off-state voltage		dV/dt (1)	1000	-	-	V/µs
COUPLER						
Trigger current	V_{TM} = 3 V	I_{FT}	-	-	10	mA

Notes

- Minimum and maximum values were tested requirements. Typical values are characteristics of the device and are the result of engineering evaluations. Typical values are for information only and are not part of the testing requirements

(1) Static dV/dt

SWITCHING CHARACTERISTICS (T_{amb} = 25 °C, unless otherwise specified)						
PARAMETER	**TEST CONDITION**	**SYMBOL**	**MIN.**	**TYP.**	**MAX.**	**UNIT**
Turn-on time	V_D = 6 V to 4 V, R_L = 100 Ω, I_F = rated I_{FT} x 1.5	t_{on}	-	30	100	µs

Note

- Minimum and maximum values were tested requirements. Typical values are characteristics of the device and are the result of engineering evaluations. Typical values are for information only and are not part of the testing requirements

SAFETY AND INSULATION RATINGS (T_{amb} = 25 °C, unless otherwise specified)				
PARAMETER	**TEST CONDITION**	**SYMBOL**	**VALUE**	**UNIT**
Climatic classification	According to IEC 68 part 1		55 / 115 / 21	
Comparative tracking index	Insulation group IIIa	CTI	175	
Maximum rated withstanding isolation voltage	According to UL1577, t = 1 min	V_{ISO}	3750	V_{RMS}
Maximum transient isolation voltage	According to DIN EN 60747-5-5	V_{IOTM}	6000	V_{peak}
Maximum repetitive peak isolation voltage	According to DIN EN 60747-5-5	V_{IORM}	565	V_{peak}
Isolation resistance	V_{IO} = 500 V, T_{amb} = 25 °C	R_{IO}	10^{12}	Ω
	V_{IO} = 500 V, T_{amb} = 100 °C	R_{IO}	10^{11}	Ω
Output safety power		P_{SO}	300	mW
Input safety current		I_{SI}	50	mA
Input safety temperature		T_S	150	°C
Creepage distance			> 5	mm
Clearance distance			> 5	mm
Insulation thickness		DTI	> 0.4	mm

Note

- As per IEC 60747-5-5, § 7.4.3.8.2, this optocoupler is suitable for “safe electrical insulation” only within the safety ratings. Compliance with the safety ratings shall be ensured by means of protective circuits

For technical questions, contact: optocoupleranswers@vishay.com
THIS DOCUMENT IS SUBJECT TO CHANGE WITHOUT NOTICE. THE PRODUCTS DESCRIBED HEREIN AND THIS DOCUMENT ARE SUBJECT TO SPECIFIC DISCLAIMERS, SET FORTH AT www.vishay.com/doc?91000

TYPICAL CHARACTERISTICS (T_{amb} = 25 °C, unless otherwise specified)

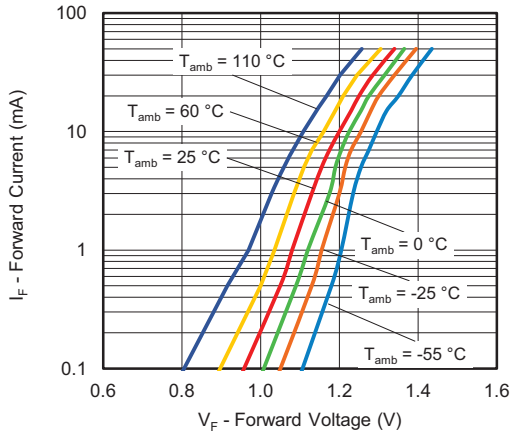

Fig. 3 - Forward Current vs. Forward Voltage

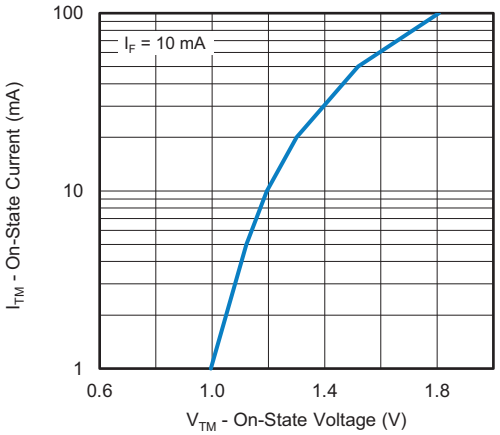

Fig. 6 - On State Current vs. On State Voltage

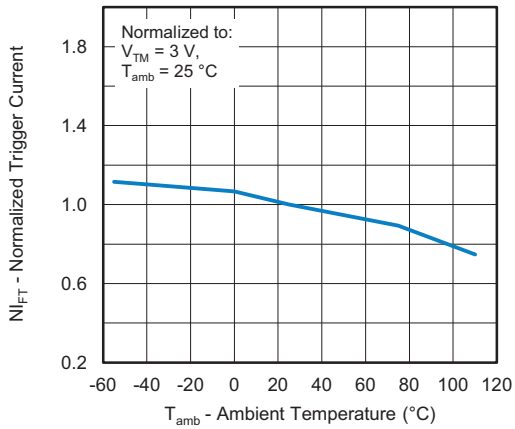

Fig. 4 - Normalized Trigger Current vs. Ambient Temperature

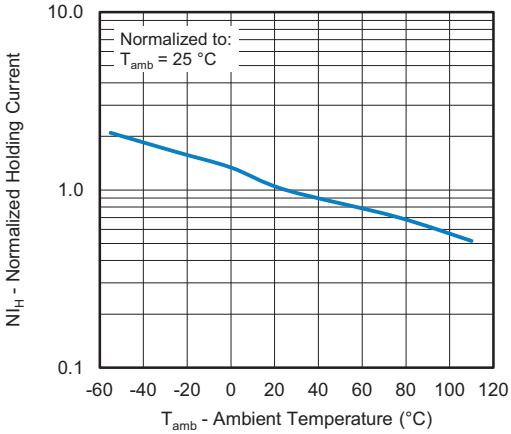

Fig. 7 - Normalized Holding Current vs. Ambient Temperature

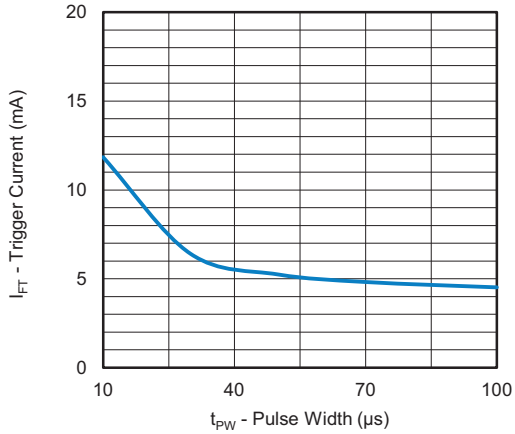

Fig. 5 - Trigger Current vs. Pulse Width

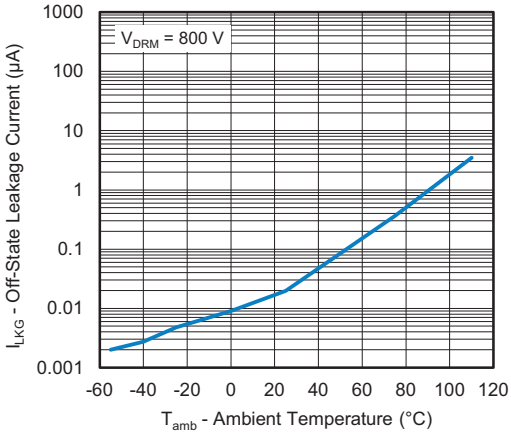

Fig. 8 - Off-State Leakage Current vs. Ambient Temperature

For technical questions, contact: optocoupleranswers@vishay.com
THIS DOCUMENT IS SUBJECT TO CHANGE WITHOUT NOTICE. THE PRODUCTS DESCRIBED HEREIN AND THIS DOCUMENT ARE SUBJECT TO SPECIFIC DISCLAIMERS, SET FORTH AT www.vishay.com/doc?91000

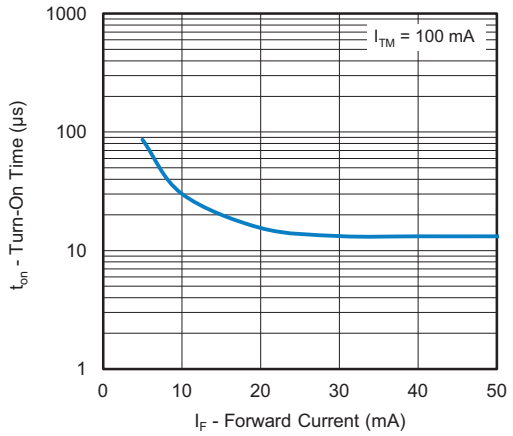

Fig. 9 - Turn-On Time vs. Forward Current

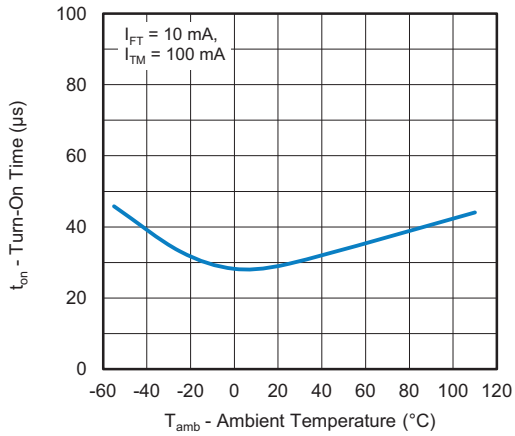

Fig. 10 - Turn-On Time vs. Ambient Temperature

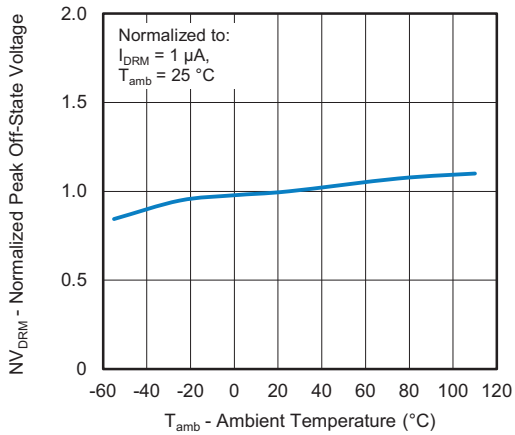

Fig. 11 - Normalized Peak Off-State Voltage vs. Ambient Temperature

For technical questions, contact: optocoupleranswers@vishay.com
THIS DOCUMENT IS SUBJECT TO CHANGE WITHOUT NOTICE. THE PRODUCTS DESCRIBED HEREIN AND THIS DOCUMENT ARE SUBJECT TO SPECIFIC DISCLAIMERS, SET FORTH AT www.vishay.com/doc?91000

PACKAGE DIMENSIONS (in millimeters)

SOP-4

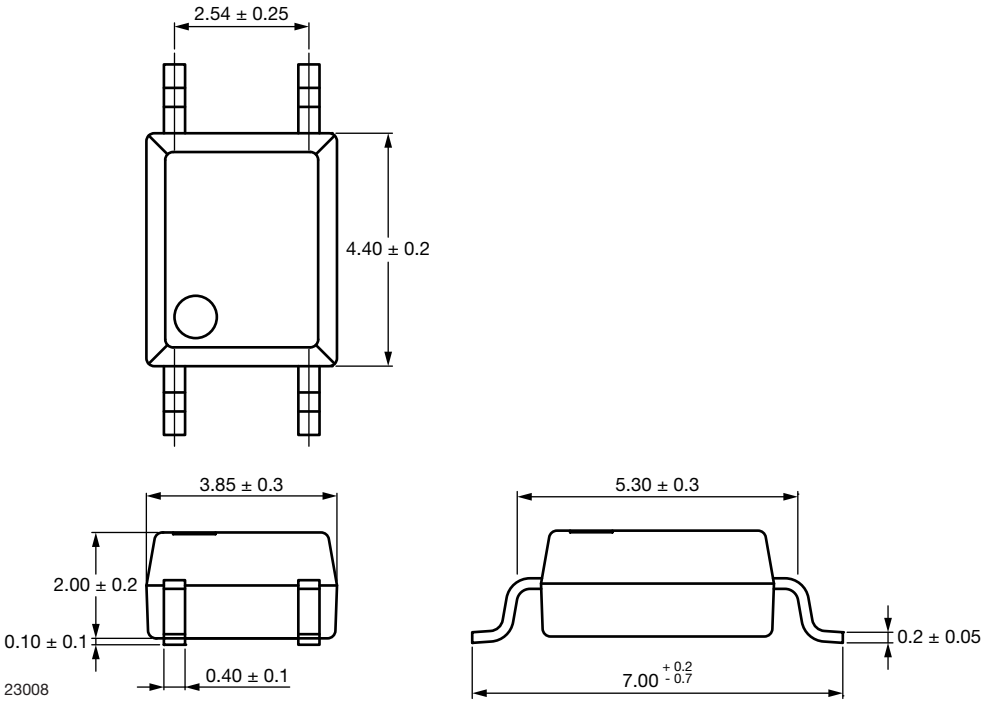

Fig. 1

PACKAGE MARKING

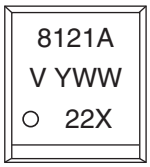

Fig. 12 - Example of VOT8121AM-VT

Notes

- "YWW" is the date code marking (Y = year code, WW = week code)
- "X" is only marked on VDE option parts
- Tape and reel suffix (T) is not part of the package marking

For technical questions, contact: optocoupleranswers@vishay.com
THIS DOCUMENT IS SUBJECT TO CHANGE WITHOUT NOTICE. THE PRODUCTS DESCRIBED HEREIN AND THIS DOCUMENT ARE SUBJECT TO SPECIFIC DISCLAIMERS, SET FORTH AT www.vishay.com/doc?91000

PACKAGING INFORMATION (in millimeters)

Tape SOP-4

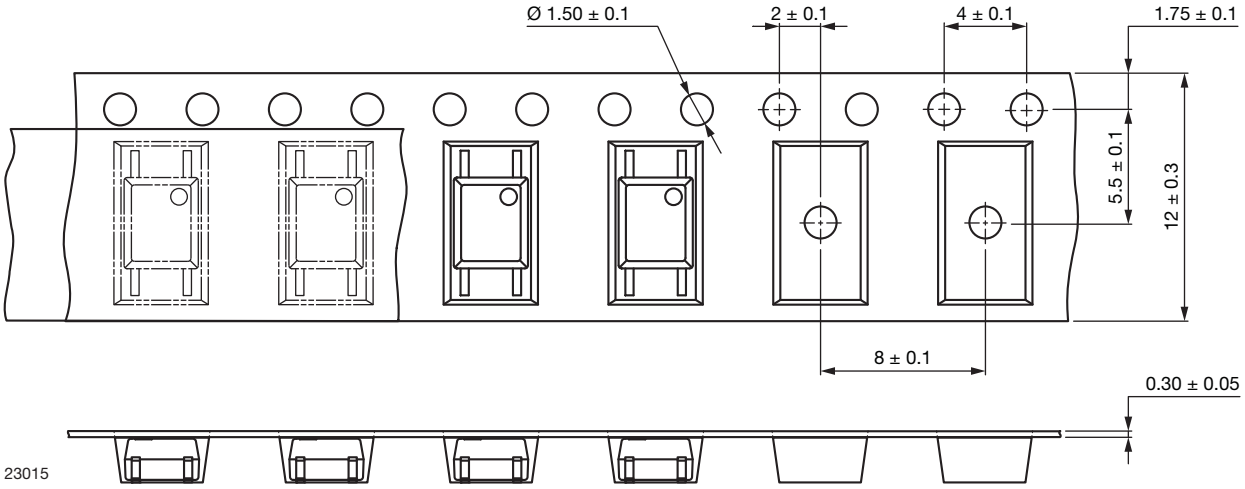

Fig. 13 - Tape and Reel Packaging (3000 pieces on reel)

Tape SOP-4, 180° Orientation

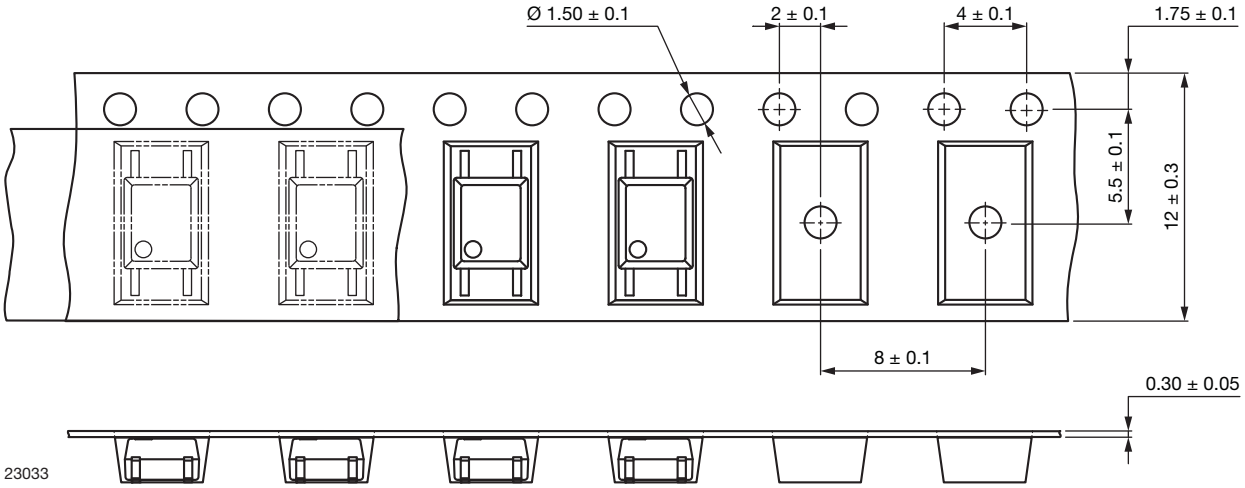

Fig. 14 - Tape and Reel Packaging (3000 pieces on reel)

For technical questions, contact: optocoupleranswers@vishay.com
THIS DOCUMENT IS SUBJECT TO CHANGE WITHOUT NOTICE. THE PRODUCTS DESCRIBED HEREIN AND THIS DOCUMENT ARE SUBJECT TO SPECIFIC DISCLAIMERS, SET FORTH AT www.vishay.com/doc?91000

Reel

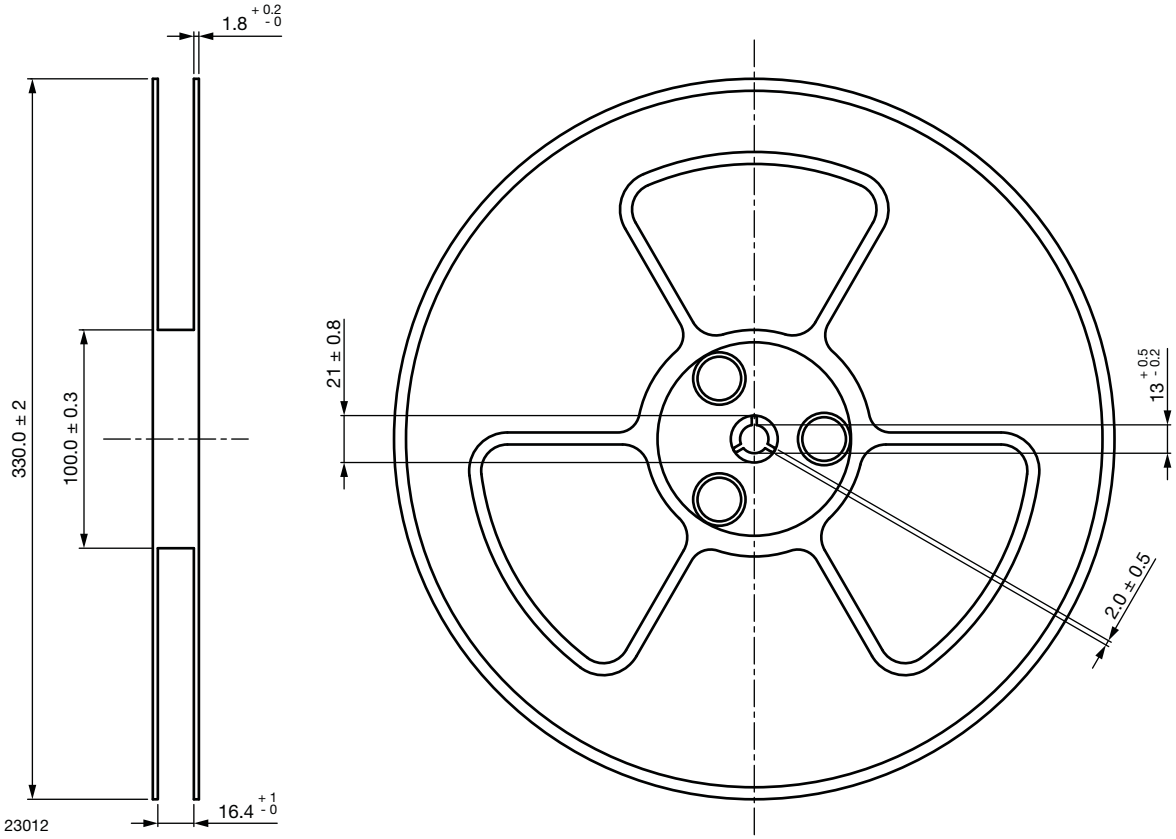

Fig. 15 - Tape and Reel Shipping Medium

For technical questions, contact: optocoupleranswers@vishay.com
THIS DOCUMENT IS SUBJECT TO CHANGE WITHOUT NOTICE. THE PRODUCTS DESCRIBED HEREIN AND THIS DOCUMENT ARE SUBJECT TO SPECIFIC DISCLAIMERS, SET FORTH AT www.vishay.com/doc?91000

SOLDER PROFILES

IR Reflow Soldering (JEDEC® J-STD-020C compliant)

One time soldering reflow is recommended within the condition of temperature and time profile shown below. Do not solder more than three times.

PROFILE ITEM	CONDITIONS
Preheat	
- Temperature minimum ($T_{S\ min.}$)	150 °C
- Temperature maximum ($T_{S\ max.}$)	200 °C
- Time (min. to max.) (t_S)	90 s ± 30 s
Soldering zone	
- Temperature (T_L)	217 °C
- Time (t_L)	60 s
Peak temperature (T_p)	260 °C
Ramp-up rate	3 °C/s max.
Ramp-down rate	3 °C/s to 6 °C/s

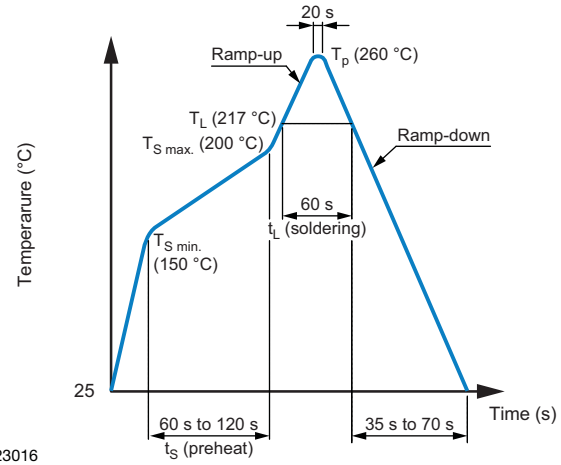

Fig. 2

Wave Soldering (JEDEC JESD22-A111 compliant)

One time soldering is recommended within the condition of temperature.

Temperature: 260 °C + 0 °C / - 5 °C

Time: 10 s

Preheat temperature: 25 °C to 140 °C

Preheat time: 30 s to 80 s

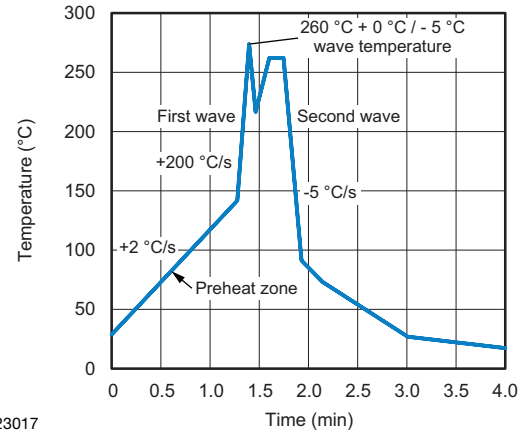

Fig. 3

Hand Soldering by Soldering Iron

Allow single lead soldering in every single process. One time soldering is recommended.

Temperature: 380 °C + 0 °C / - 5 °C

Time: 3 s max.

HANDLING AND STORAGE CONDITIONS

ESD level: HBM class 2

Floor life: unlimited

Conditions: T_{amb} < 30 °C, RH < 85 %

Moisture sensitivity level 1, according to J-STD-020

For technical questions, contact: optocoupleranswers@vishay.com
THIS DOCUMENT IS SUBJECT TO CHANGE WITHOUT NOTICE. THE PRODUCTS DESCRIBED HEREIN AND THIS DOCUMENT ARE SUBJECT TO SPECIFIC DISCLAIMERS, SET FORTH AT www.vishay.com/doc?91000

Disclaimer

ALL PRODUCT, PRODUCT SPECIFICATIONS AND DATA ARE SUBJECT TO CHANGE WITHOUT NOTICE TO IMPROVE RELIABILITY, FUNCTION OR DESIGN OR OTHERWISE.

Vishay Intertechnology, Inc., its affiliates, agents, and employees, and all persons acting on its or their behalf (collectively, “Vishay”), disclaim any and all liability for any errors, inaccuracies or incompleteness contained in any datasheet or in any other disclosure relating to any product.

Vishay makes no warranty, representation or guarantee regarding the suitability of the products for any particular purpose or the continuing production of any product. To the maximum extent permitted by applicable law, Vishay disclaims (i) any and all liability arising out of the application or use of any product, (ii) any and all liability, including without limitation special, consequential or incidental damages, and (iii) any and all implied warranties, including warranties of fitness for particular purpose, non-infringement and merchantability.

Statements regarding the suitability of products for certain types of applications are based on Vishay's knowledge of typical requirements that are often placed on Vishay products in generic applications. Such statements are not binding statements about the suitability of products for a particular application. It is the customer's responsibility to validate that a particular product with the properties described in the product specification is suitable for use in a particular application. Parameters provided in datasheets and / or specifications may vary in different applications and performance may vary over time. All operating parameters, including typical parameters, must be validated for each customer application by the customer's technical experts. Product specifications do not expand or otherwise modify Vishay's terms and conditions of purchase, including but not limited to the warranty expressed therein.

Hyperlinks included in this datasheet may direct users to third-party websites. These links are provided as a convenience and for informational purposes only. Inclusion of these hyperlinks does not constitute an endorsement or an approval by Vishay of any of the products, services or opinions of the corporation, organization or individual associated with the third-party website. Vishay disclaims any and all liability and bears no responsibility for the accuracy, legality or content of the third-party website or for that of subsequent links.

Except as expressly indicated in writing, Vishay products are not designed for use in medical, life-saving, or life-sustaining applications or for any other application in which the failure of the Vishay product could result in personal injury or death. Customers using or selling Vishay products not expressly indicated for use in such applications do so at their own risk. Please contact authorized Vishay personnel to obtain written terms and conditions regarding products designed for such applications.

No license, express or implied, by estoppel or otherwise, to any intellectual property rights is granted by this document or by any conduct of Vishay. Product names and markings noted herein may be trademarks of their respective owners.

© 2024 VISHAY INTERTECHNOLOGY, INC. ALL RIGHTS RESERVED