Single Turn Continuous Rotation Potentiometer or with Stop-Ends Conductive Plastic Track



FEATURES

- Infinite resolution
- Precious metal contacts
- Housing: high temperature thermo plastic
- Terminals: soldering pins
- Shaft: stainless steel
- Plain bearing (= sleeve bearing)
- Bush mounting
- Rotation with stop-ends (standard design) or without
- Dust proof
- Applicable standards: NFC 93255, MIL R39023
- Material categorization: for definitions of compliance please see www.vishay.com/doc?99912

QUICK REFERENCE DATA	
Sensor type	ROTATIONAL, conductive plastic
Output type	Output by turrets
Market appliance	Industrial
Dimensions	27 mm

ELECTRICAL SPECIFICATIONS	
PARAMETER	
Useful electrical travel	310° ± 5°
Independent linearity standard	± 1.0 %
Independent linearity optional	± 0.5 %
Total resistance (R_n)	10 kΩ
Tolerance on R_n	± 20 %
Output smoothness	≤ 0.1 %
Power rating at 40 °C	1 W
Temperature coefficient	-300 ± 300 ppm/°C
Wiper current	≤ 1 mA
Recommended load impedance	≥ 100 R_n for linearity = 1 % ≥ 1000 R_n for linearity ≤ 0.5 %
Insulation resistance	≥ 1 GΩ at 500 V_{DC}
Dielectric strength	750 V, 50 Hz, 1 min

MECHANICAL SPECIFICATIONS	
PARAMETER	
Mechanical rotation without stop	360° continuous
Mechanical rotation with stop	333° ± 5 ° continuous
Running and starting torque	≤ 1.4 N cm
Stop torque	100 N cm
Bush tightening torque	250 N cm
Moment of inertia	≤ 1 g cm^2
Protection class	IP50
Weight	30 g
Mounting	Bush

PERFORMANCE	
PARAMETER	
Operating temperature range	-55 °C to +105 °C
Life	10M cycles
Rotation speed (max.)	120 rpm

For technical questions, contact: mcbprecisionpot@vishay.com

THIS DOCUMENT IS SUBJECT TO CHANGE WITHOUT NOTICE. THE PRODUCTS DESCRIBED HEREIN AND THIS DOCUMENT ARE SUBJECT TO SPECIFIC DISCLAIMERS, SET FORTH AT www.vishay.com/doc?91000

SAP PART NUMBERING GUIDELINES							
MODEL	MOUNTING	TYPE	GANG	VALUE	LINEARITY	ANGLE	PACKAGING
PP27	B = bushing	S = sleeve bearing	1	103 = 10K	A = 1 %	310	B = box

DIMENSIONS in millimeters

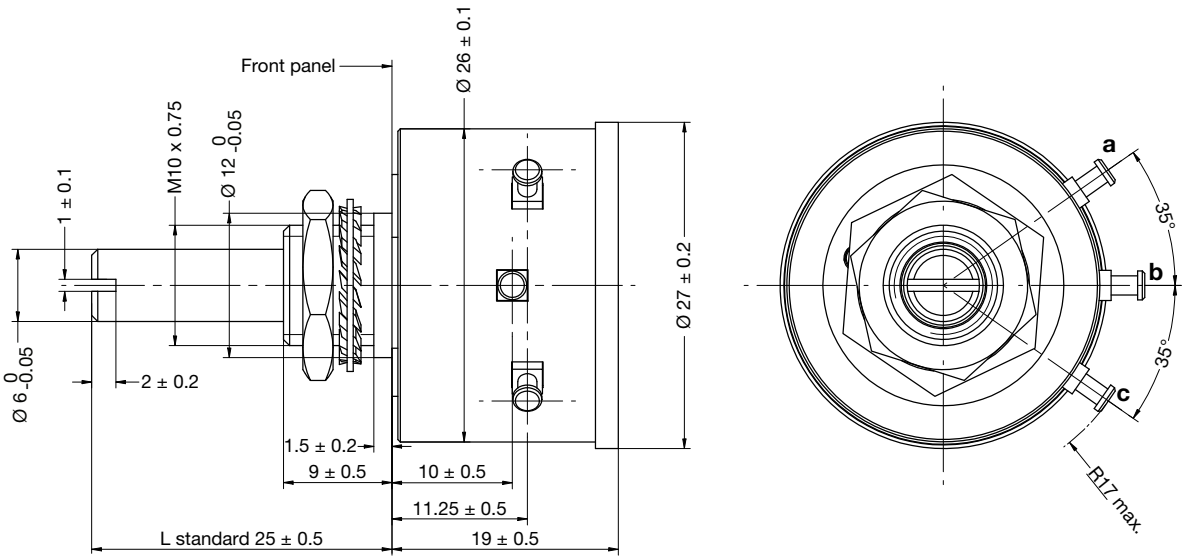

ELECTRICAL DIAGRAM

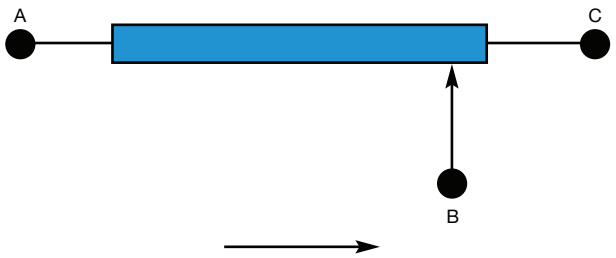

Clockwise when viewed from shaft end

POWER RATING CHART

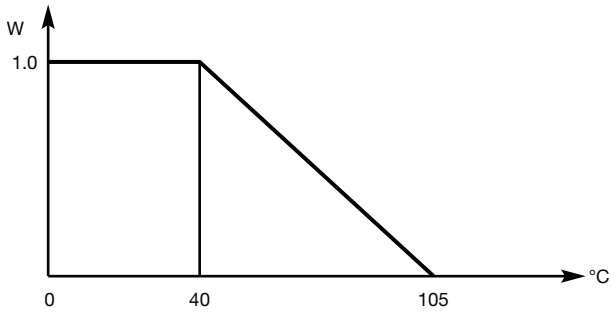

OPTIONS (on request)

- Continuous rotation (without stop-ends)
- Through shaft
- Ganging 2 or 3
- Other electrical travels
- Other ohmic value
- Other tolerances on R_n
- Other linearities (0.5 %)
- Middle tap
- Shaft with different length (top shaft, rear shaft), screwdriver slot
- Pin on the through shaft to use the rear side of potentiometer as a dial
- Output with wires equipped of connector

For technical questions, contact: mcbprecisionpot@vishay.com

THIS DOCUMENT IS SUBJECT TO CHANGE WITHOUT NOTICE. THE PRODUCTS DESCRIBED HEREIN AND THIS DOCUMENT ARE SUBJECT TO SPECIFIC DISCLAIMERS, SET FORTH AT www.vishay.com/doc?91000

Disclaimer

ALL PRODUCT, PRODUCT SPECIFICATIONS AND DATA ARE SUBJECT TO CHANGE WITHOUT NOTICE TO IMPROVE RELIABILITY, FUNCTION OR DESIGN OR OTHERWISE.

Vishay Intertechnology, Inc., its affiliates, agents, and employees, and all persons acting on its or their behalf (collectively, “Vishay”), disclaim any and all liability for any errors, inaccuracies or incompleteness contained in any datasheet or in any other disclosure relating to any product.

Vishay makes no warranty, representation or guarantee regarding the suitability of the products for any particular purpose or the continuing production of any product. To the maximum extent permitted by applicable law, Vishay disclaims (i) any and all liability arising out of the application or use of any product, (ii) any and all liability, including without limitation special, consequential or incidental damages, and (iii) any and all implied warranties, including warranties of fitness for particular purpose, non-infringement and merchantability.

Statements regarding the suitability of products for certain types of applications are based on Vishay's knowledge of typical requirements that are often placed on Vishay products in generic applications. Such statements are not binding statements about the suitability of products for a particular application. It is the customer's responsibility to validate that a particular product with the properties described in the product specification is suitable for use in a particular application. Parameters provided in datasheets and / or specifications may vary in different applications and performance may vary over time. All operating parameters, including typical parameters, must be validated for each customer application by the customer's technical experts. Product specifications do not expand or otherwise modify Vishay's terms and conditions of purchase, including but not limited to the warranty expressed therein.

Hyperlinks included in this datasheet may direct users to third-party websites. These links are provided as a convenience and for informational purposes only. Inclusion of these hyperlinks does not constitute an endorsement or an approval by Vishay of any of the products, services or opinions of the corporation, organization or individual associated with the third-party website. Vishay disclaims any and all liability and bears no responsibility for the accuracy, legality or content of the third-party website or for that of subsequent links.

Vishay products are not designed for use in life-saving or life-sustaining applications or any application in which the failure of the Vishay product could result in personal injury or death unless specifically qualified in writing by Vishay. Customers using or selling Vishay products not expressly indicated for use in such applications do so at their own risk. Please contact authorized Vishay personnel to obtain written terms and conditions regarding products designed for such applications.

No license, express or implied, by estoppel or otherwise, to any intellectual property rights is granted by this document or by any conduct of Vishay. Product names and markings noted herein may be trademarks of their respective owners.

© 2025 VISHAY INTERTECHNOLOGY, INC. ALL RIGHTS RESERVED

THIS DOCUMENT IS SUBJECT TO CHANGE WITHOUT NOTICE. THE PRODUCTS DESCRIBED HEREIN AND THIS DOCUMENT ARE SUBJECT TO SPECIFIC DISCLAIMERS, SET FORTH AT www.vishay.com/doc?91000