Data sheet

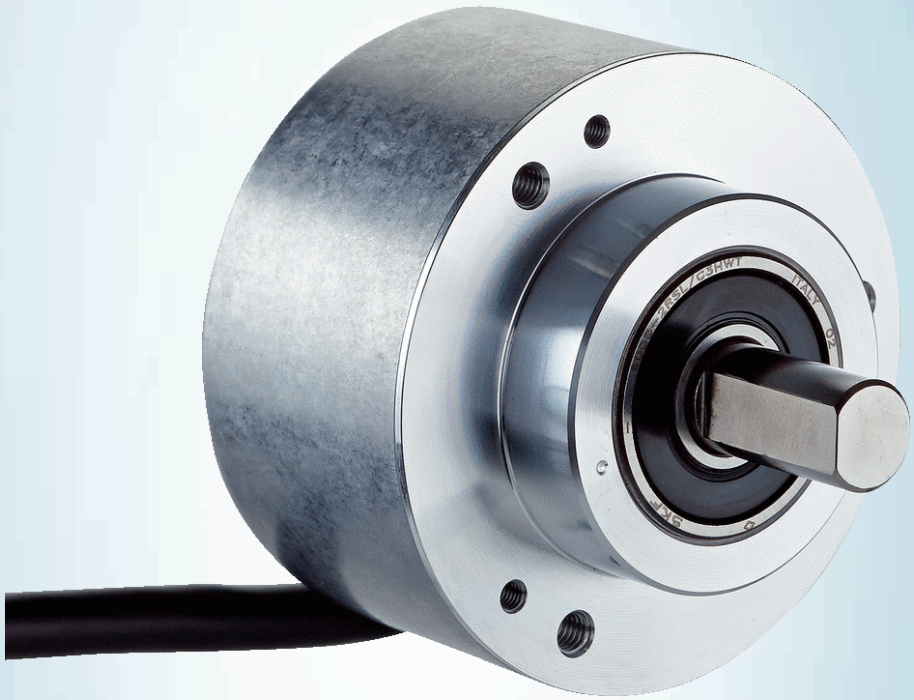

DBS60E-S4FM01024

DBS60

INCREMENTAL ENCODERS

SICK
Sensor Intelligence.



Illustration may differ

Ordering information

Type	part no.
DBS60E-S4FM01024	1111924

Other models and accessories ➜ www.sick.com/DBS60

Detailed technical data

Safety-related parameters

$MTTF_D$ (mean time to dangerous failure)	500 years (EN ISO 13849-1) [1]

[1] This product is a standard product and does not constitute a safety component as defined in the Machinery Directive. Calculation based on nominal load of components, average ambient temperature 40 °C, frequency of use 8760 h/a. All electronic failures are considered hazardous. For more information, see document no. 8015532.

Performance

Pulses per revolution	1,024
Measuring step	≤ 90 °, electric/pulses per revolution
Measuring step deviation	± 18 ° / pulses per revolution
Error limits	Measuring step deviation x 3
Duty cycle	≤ 0.5 ± 5 %

Interfaces

Communication interface	Incremental
Communication Interface detail	TTL / HTL [1]
Number of signal channels	6-channel
Initialization time	< 5 ms [2]
Output frequency	+ 300 kHz [3]
Load current	≤ 30 mA, per channel
Power consumption	≤ 0.5 W (without load)

[1] Output level depends on the supply voltage.
[2] Valid signals can be read once this time has elapsed.
[3] Up to 450 kHz on request.

Electronics

Connection type	Cable, 8-wire, universal, 5 m [1]
Supply voltage	4.5 ... 30 V

[1] The universal cable connection is positioned so that it is possible to lay it without bends in a radial or axial direction.
[2] Short-circuit opposite to another channel, US or GND permissable for maximum 30 s.

Reference signal, number	1
Reference signal, position	90°, electric, logically gated with A and B
Reverse polarity protection	✓
Short-circuit protection of the outputs	✓ [2]

[1] The universal cable connection is positioned so that it is possible to lay it without bends in a radial or axial direction.
[2] Short-circuit opposite to another channel, US or GND permissable for maximum 30 s.

Mechanics

Mechanical design	Solid shaft, face mount flange
Shaft diameter	10 mmWith face
Shaft length	19 mm
Flange type / stator coupling	Flange with 3 x M3 and 3 x M4
Weight	+ 0.3 kg [1]
Shaft material	Stainless steel
Flange material	Aluminum
Housing material	Aluminum
Material, cable	PVC
Start up torque	+ 1.2 Ncm (+20 °C)
Operating torque	1.1 Ncm (+20 °C)
Permissible shaft loading	100 N (radial) [2] 50 N (axial) [2]
Operating speed	6,000 min^{-1} [3]
Maximum operating speed	9,000 min^{-1} [4]
Moment of inertia of the rotor	33 gcm^2
Bearing lifetime	3.6 x 10^9 revolutions
Angular acceleration	≤ 500,000 rad/s^2

[1] Based on encoder with male connector or cable with male connector.
[2] Higher values are possible using limited bearing life.
[3] Allow for self-heating of 3.2 K per 1,000 rpm when designing the operating temperature range.
[4] Maximum speed which does not cause mechanical damage to the encoder. Impact on the service life and signal quality is possible. Please note the maximum output frequency.

Ambient data

EMC	According to EN 61000-6-2 and EN 61000-6-3
Enclosure rating	IP67, housing side (IEC 60529) IP65, shaft side (IEC 60529)
Permissible relative humidity	90 % (Condensation not permitted)
Operating temperature range	–30 °C ... +100 °C, at maximum 3,000 pulses per revolution [1]
Storage temperature range	–40 °C ... +100 °C, without package
Resistance to shocks	250 g, 3 ms (EN 60068-2-27)
Resistance to vibration	30 g, 10 Hz ... 2,000 Hz (EN 60068-2-6)

[1] These values relate to all mechanical versions including recommended accessories unless otherwise noted.

Certificates

EU declaration of conformity	✓
UK declaration of conformity	✓
ACMA declaration of conformity	✓
China-RoHS	✓
cULus certificate	✓
Information according to Art. 3 of Data Act (Regulation EU 2023/2854)	✓

Classifications

ECLASS 5.0	27270501
ECLASS 5.1.4	27270501
ECLASS 6.0	27270590
ECLASS 6.2	27270590
ECLASS 7.0	27270501
ECLASS 8.0	27270501
ECLASS 8.1	27270501
ECLASS 9.0	27270501
ECLASS 10.0	27270501
ECLASS 11.0	27270501
ECLASS 12.0	27270501
ETIM 5.0	EC001486
ETIM 6.0	EC001486
ETIM 7.0	EC001486
ETIM 8.0	EC001486
UNSPSC 16.0901	41112113

Dimensional drawing

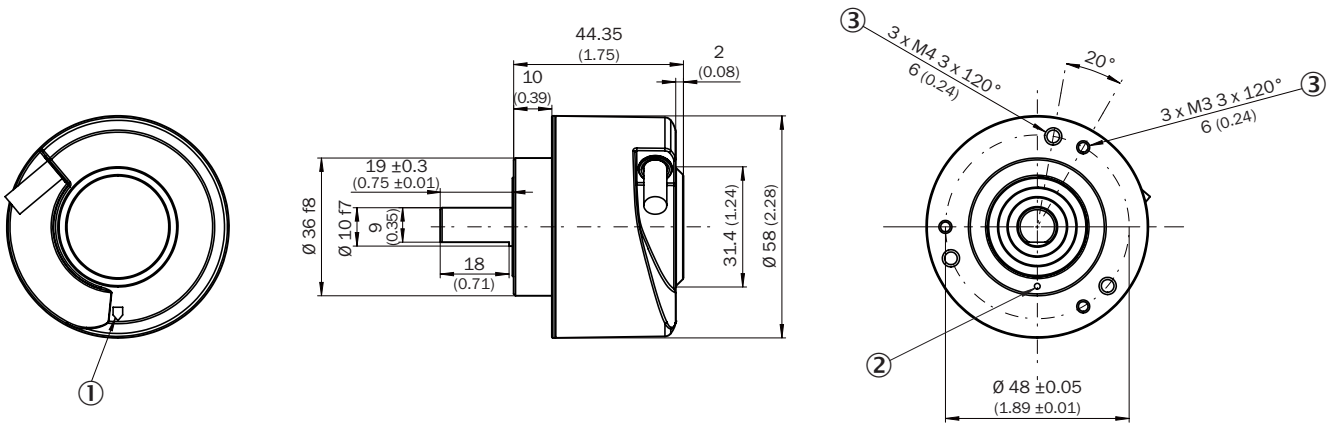

Dimensions in mm (inch)
① Zero pulse mark on housing
② Zero pulse mark on flange

③ depth

PIN assignment

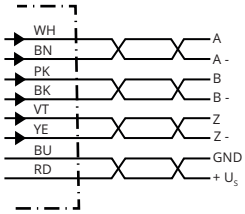

Wire colors (cable connection)	Male connector M12, 8-pin	Male connector M23, 12-pin	TTL/HTL 6-channel signal	Explanation
Brown	1	6	A-	Signal wire
White	2	5	A	Signal wire
Black	3	1	B-	Signal wire
Pink	4	8	B	Signal wire
Yellow	5	4	Z-	Signal wire
Purple	6	3	Z	Signal wire
Blue	7	10	GND	Ground connection
Red	8	12	$+U_s$	Supply voltage
-	-	9	Not assigned	Not assigned
-	-	2	Not assigned	Not assigned
-	-	11	Not assigned	Not assigned
-	-	7	Not assigned	Not assigned
Screen	Screen	Screen	Screen	Screen connected to encoder housing

Diagrams

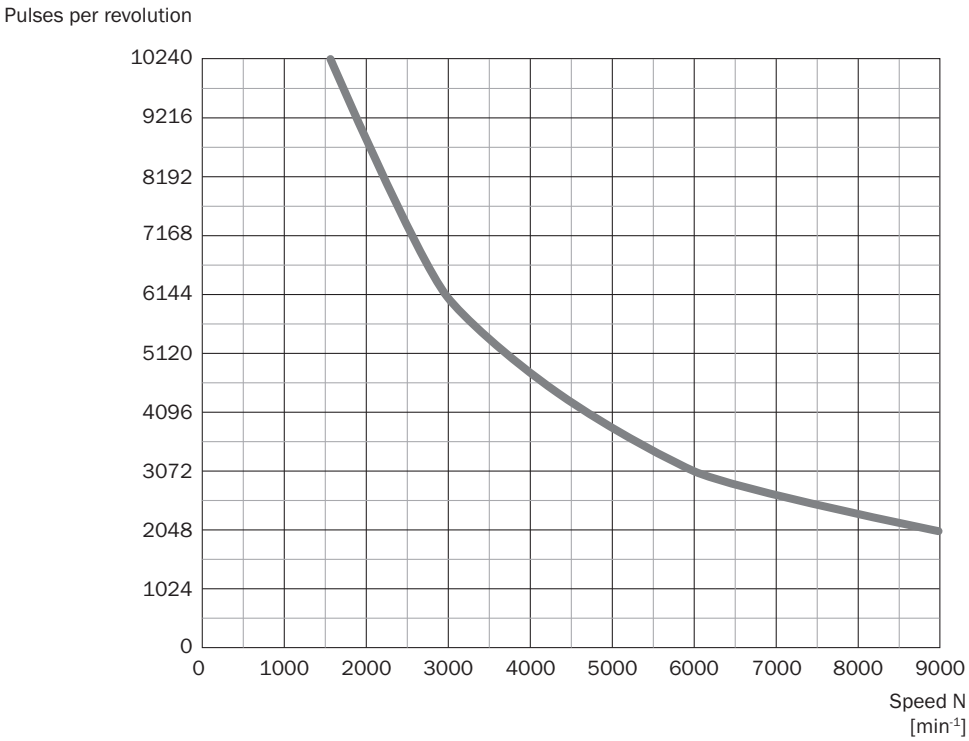

Diagrams Signal outputs for electrical interfaces TTL and HTL

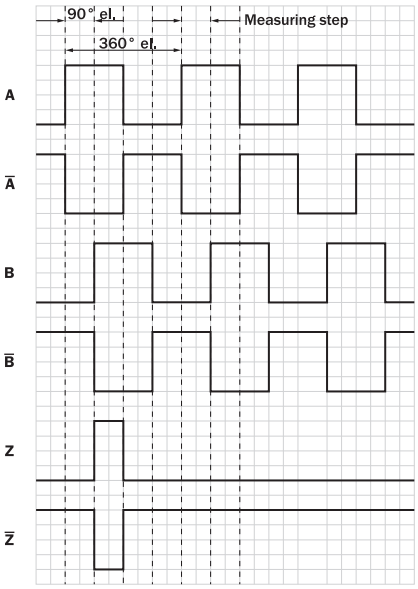

Cw with view on the encoder shaft in direction "A", compare dimensional drawing.

Supply voltage	Output
4,5 V ... 5,5 V	TTL
10 V ... 30 V	TTL
10 V ... 27 V	HTL

Supply voltage	Output
4,5 V ... 30 V	TTL/HTL universal
4,5 V ... 30 V	TTL

Operation note Solid shaft, face mount flange

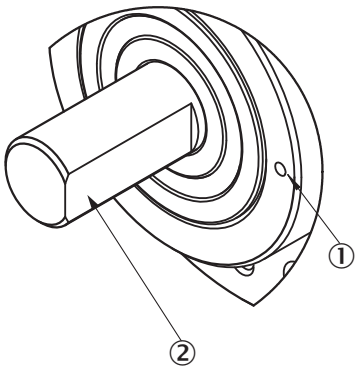

① Zero pulse mark on flange
② Zero pulse active when the surface of the shaft shows the zero pulse mark on the flange

Recommended accessories

Other models and accessories ➜ www.sick.com/DBS60

	Brief description	Type	part no.
connectors and cables			
	• **Connection type head A:** Flying leads • **Connection type head B:** Flying leads • **Signal type:** SSI, Incremental, HIPERFACE® • **Items supplied:** By the meter • **Cable:** 8-wire, PUR, halogen-free • **Description:** SSI, shielded, Incremental, HIPERFACE®	LTG-2308-MWENC	6027529
	• **Connection type head A:** Flying leads • **Connection type head B:** Flying leads • **Signal type:** SSI, Incremental • **Items supplied:** By the meter • **Cable:** 11-wire, PUR • **Description:** SSI, shielded, Incremental	LTG-2411-MW	6027530
	• **Connection type head A:** Flying leads • **Connection type head B:** Flying leads • **Signal type:** SSI, Incremental • **Items supplied:** By the meter • **Cable:** 12-wire, PUR, halogen-free • **Description:** SSI, shielded, Incremental	LTG-2512-MW	6027531
	• **Connection type head A:** Flying leads • **Connection type head B:** Flying leads • **Signal type:** SSI, TTL, HTL, Incremental • **Items supplied:** By the meter • **Cable:** 12-wire, UV and saltwater-resistant, PUR, halogen-free • **Description:** SSI, shielded, TTL, HTL, Incremental	LTG-2612-MW	6028516
	• **Connection type head A:** Male connector, M23, 12-pin, straight, A-coded • **Signal type:** HIPERFACE®, SSI, Incremental • **Description:** HIPERFACE®, shieldedSSIIncremental • **Connection systems:** Solder connection	STE-2312-G01	2077273
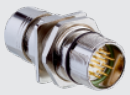	• **Connection type head A:** Male connector, M23, 12-pin, straight, A-coded • **Signal type:** HIPERFACE®, SSI, Incremental • **Description:** HIPERFACE®, shieldedSSIIncremental • **Connection systems:** Solder connection	STE-2312-GX	6028548
	• **Connection type head A:** Male connector, M12, 8-pin, straight, A-coded • **Signal type:** Incremental • **Cable:** CAT5, CAT5e • **Description:** Incremental, shielded • **Connection systems:** IDC quick connection • **Permitted cross-section:** 0.14 mm² ... 0.34 mm²	STE-1208-GA01	6044892

	Brief description	Type	part no.
Mounting systems			
	• **Description:** Bearing block for servo and face mount flange encoder. The heavy-duty bearing block is used to absorb very large radial and axial shaft loads. Particularly when using belt pulleys, chain sprockets, friction wheels. Operating speed max. 4,000 rpm^-1, axial shaft load 150 N, radial shaft load 250 N, bearing service life 3.6 x 10^9 revolutions	BEF-FA-LB1210	2044591
	• **Description:** Mounting kit for servo flange encoder on the bearing block, 1 bar coupling SKPS 1520 06/06 1 hexagon socket wrench SW1.5 DIN 911, 3 mounting eccentric BEMN 1242 49 3 screws M4 x 10 DIN 912,1 hexagon socket wrench SW3 DIN 911	BEF-MK-LB	5320872

	Brief description	Type	part no.
	• **Items supplied:** 1 bar coupling SKPS 1520 06/06 1 hexagon socket wrench SW1.5 DIN 911, 3 mounting eccentric BEMN 1242 49 3 screws M4 x 10 DIN 912, 1 hexagon socket wrench SW3 DIN 911		
	• **Description:** Mounting bracket for encoder with spigot 36 mm for face mount flange • **Items supplied:** Mounting kit included	BEF-WF-36	2029164
	• **Description:** Flange adapter, adaptation of face mount flange with 36 mm centering hub to 58 mm square mounting plate with shock absorbers, aluminum • **Material:** Aluminum • **Details:** Aluminum	BEF-FA-036-060RSA	2029163
	• **Description:** Flange adapter, adaptation of face mount flange with 36 mm centering hub to 60 mm square mounting plate, aluminum, including 3 flat head screws M4 x 8 • **Material:** Aluminum • **Details:** Aluminum • **Items supplied:** Including 3 countersunk screws M4 x 8	BEF-FA-036-060REC	2029162
	• **Description:** Flange adapter, adaptation of face mount flange with 36 mm centering hub to 100 mm servo flange with 60 mm centering hub, aluminum • **Material:** Aluminum • **Details:** Aluminum	BEF-FA-036-100	2029161
	• **Description:** Flange adapter, adaptation of face mount flange with 36 mm centering hub to 50 mm servo flange, aluminum, including 3 flat head screws M4 x 10 • **Material:** Aluminum • **Details:** Aluminum • **Items supplied:** Including 3 countersunk screws M3 x 10	BEF-FA-036-050	2029160
	• **Description:** Flange adapter, adaptation of face mount flange with 36 mm centering hub to 63 mm square mounting plate, aluminum, including 3 flat head screws M4 x 10 • **Material:** Aluminum • **Details:** Aluminum • **Items supplied:** Including 3 countersunk screws M3 x 10	BEF-FA-036-063REC	2034225
	• **Description:** Flange adapter (adapts size 60 face mount flange encoder to bearing block with part. no. 2044591)	BEF-FA-036-050-019	2063378
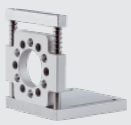	• **Description:** Mounting angle spring-loaded, for flange with centerring collar 36 mm, working temperature range –40° ... +120°C • **Material:** Aluminum • **Details:** Aluminum	BEF-WF36F	4084775

	Brief description	Type	part no.
shaft adaptation			
	• **Product segment:** Shaft adaptation • **Product:** Shaft couplings • **Description:** Bellows coupling, shaft diameter 6 mm / 10 mm, maximum shaft offset: radial ± 0.25 mm, axial ± 0.4 mm, angular +/- 4°; max. speed 10,000 rpm, –30 °C to +120 °C, max. torque 120 Ncm; material: stainless steel bellows, aluminum hub	KUP-0610-B	5312982
	• **Product segment:** Shaft adaptation • **Product:** Shaft couplings • **Description:** Spring washer coupling, shaft diameter 6 mm / 10 mm, Maximum shaft offset: radial +/- 0.3 mm, axial +/- 0.4 mm, angular +/- 2.5°; max. speed 12,000 rpm, –10° to +80 °C, max. torque 60 Ncm; material: aluminum flange, glass fiber-reinforced polyamide membrane and hardened steel coupling pin	KUP-0610-F	5312985
	• **Product segment:** Shaft adaptation • **Product:** Shaft couplings • **Description:** Double loop coupling, shaft diameter 6 mm / 10 mm, max. shaft offset: radially +/- 2,5 mm, axially +/-3 mm, angle +/- 10 degrees;max. speed 3.000 rpm, –30 to +80 degrees Celsius, torsional spring stiffness of 25 Nm/rad	KUP-0610-D	5326697
	• **Product segment:** Shaft adaptation • **Product:** Shaft couplings • **Description:** Bar coupling, shaft diameter 6 mm / 10 mm, max. shaft offset: radial ± 0,3 mm, axial ± 0,3 mm, angular ± 3°; max. speed 10.000 rpm, –10° to +80 °C, max. torque: 80 Ncm, material: fiber-glass reinforced polyamide, aluminum hub	KUP-0610-S	2056407
	• **Product segment:** Shaft adaptation • **Product:** Shaft couplings • **Description:** Claw coupling, shaft diameter 6 mm / 10 mm, damping element 80 shore blue, maximum shaft offset: radial ± 0.22 mm, axial ± 1 mm angular ± 1.3°, max. speed 19,000 rpm, angle of twist max. 10°, –30 °C to +80 °C, max. torque 800 Ncm, tightening torque of screws: ISO 4029 150 Ncm, material: aluminum flange, damping element: polyurethane	KUP-0610-J	2127056
	• **Product segment:** Shaft adaptation • **Product:** Shaft couplings • **Description:** Bar coupling, shaft diameter 10 mm / 10 mm; maximum shaft offset: radial ± 0.3 mm, axial ± 0.2 mm, angular ± 3°; speed 10,000 rpm, –10° to +80° Celsius, max. torque 80 Ncm; material: glass fiber-reinforced polyamide, aluminum hub	KUP-1010-S	2056408
	• **Product segment:** Shaft adaptation • **Product:** Shaft couplings • **Description:** Bellows coupling, shaft diameter 10 mm/10 mm; maximum shaft offset: radial +/- 0.25 mm, axial +/- 0.4 mm, angular +/- 4°; max. revolutions 10,000 rpm, –30° to +120 °C, max. torque 120 Ncm; material: stainless steel bellows, aluminum clamping hubs	KUP-1010-B	5312983
	• **Product segment:** Shaft adaptation • **Product:** Shaft couplings • **Description:** 10 mm / 12 mm; maximum shaft offset: radial +/- 0.25 mm, axial +/- 0.4 mm, angular +/- 4°; max. revolutions 10,000 rpm, –30° to +120 °C, max. torque 120 Ncm; material: stainless steel bellows, aluminum clamping hubs	KUP-1012-B	5312984
	• **Product segment:** Shaft adaptation • **Product:** Shaft couplings • **Description:** Spring washer coupling, shaft diameter 10 mm / 10 mm, maximum shaft offset, radial ± 0.3 mm, axial ± 0.4 mm, angle ± 2.5°, torsion spring stiffness 30 Nm/rad; material: aluminum flange, glass-fiber reinforced polyamide membrane and hardened steel coupling pin	KUP-1010-F	5312986
	• **Product segment:** Shaft adaptation • **Product:** Shaft couplings • **Description:** Bar coupling, shaft diameter 8 mm / 10 mm, max. shaft offset: radial ± 0,3 mm, axial ± 0,3 mm, angular ± 3°; max. speed 10.000 rpm, –10° to +80 °C, max. torque: 80 Ncm, material: fiber-glass reinforced polyamide, aluminum hub	KUP-0810-S	5314178
	• **Product segment:** Shaft adaptation • **Product:** Shaft couplings • **Description:** Spring coupling, shaft diameter 10 mm / 10 mm, maximum shaft offset: radial ± 1.5 mm, axial ± 1.0 mm, angular ± 5°, max. speed 3,000 rpm, –30° to +120 °Celsius, nominal torque 150 Ncm, rotational angle at half nominal torque, direction of rotation right viewed on	KUP-1010-W	5319914

	Brief description	Type	part no.
	driving shaft 40°, left viewed on driving shaft 60°, material: spring steel 1.0600 nickel plated, zinc die cast hubs		
	• **Product segment:** Shaft adaptation • **Product:** Shaft couplings • **Description:** Double loop coupling, shaft diameter 10 mm / 10 mm, Maximum shaft offset: radial +/- 2.5 mm, axial +/- 3 mm, angular +/- 10°; max. speed 3,000 rpm, –30° to +80 °C, max. torque 1.5 Nm; material: polyurethane, galvanized steel flange	KUP-1010-D	5326703
	• **Product segment:** Shaft adaptation • **Product:** Shaft couplings • **Description:** Double loop coupling, shaft diameter 8 mm / 10 mm, max. shaft offset: radially +/- 0,25 mm, axially +/-0,4 mm, angle +/- 4 degrees;max. speed 10.000 rpm, –30 to +120 degrees Celsius, torsional spring stiffness of 150 Nm/rad	KUP-0810-D	5326704
	• **Product segment:** Shaft adaptation • **Product:** Shaft couplings • **Description:** Claw coupling, shaft diameter 8 mm / 10 mm, damping element 80 shore blue, maximum shaft offset: radial ± 0.22 mm, axial ± 1 mm angular ± 1.3°, max. speed 19,000 rpm, angle of twist max. 10°, –30 °C to +80 °C, max. torque 800 Ncm, tightening torque of screws: ISO 4029 150 Ncm, material: aluminum flange, damping element: polyurethane	KUP-0810-J	2128267
	• **Product segment:** Shaft adaptation • **Product:** Shaft couplings • **Description:** Claw coupling, shaft diameter 10 mm / 10 mm, damping element 80 shore blue, maximum shaft offset: radial ± 0.22 mm, axial ± 1 mm angular ± 1.3°, max. speed 19,000 rpm, angle of twist max. 10°, –30 °C to +80 °C, max. torque 800 Ncm, tightening torque of screws: ISO 4029 150 Ncm, material: aluminum flange, damping element: polyurethane	KUP-1010-J	2127054

	Brief description	Type	part no.
measuring wheels and measuring wheel mechanics			
	• **Product segment:** Measuring wheels and measuring wheel mechanics • **Product family:** Measuring wheel mechanics • **Description:** O-ring for measuring wheels (circumference 200 mm)	BEF-OR-053-040	2064061
	• **Product segment:** Measuring wheels and measuring wheel mechanics • **Product family:** Measuring wheel mechanics • **Description:** O-ring for measuring wheels (circumference 300 mm) • **Items supplied:** 2x O-ring	BEF-OR-083-050	2064076
	• **Product segment:** Measuring wheels and measuring wheel mechanics • **Product family:** Measuring wheel mechanics • **Description:** O-ring for measuring wheels (circumference 500 mm)	BEF-OR-145-050	2064074
	• **Product segment:** Measuring wheels and measuring wheel mechanics • **Product family:** Measuring wheels • **Description:** Aluminium measuring wheel with O-ring (NBR70) for 10 mm solid shaft, circumference 300 mm	BEF-MR010030R	2049278
	• **Product segment:** Measuring wheels and measuring wheel mechanics • **Product family:** Measuring wheels • **Description:** Aluminium measuring wheel with O-ring (NBR70) for 10 mm solid shaft, circumference 200 mm	BEF-MR010020R	2055224
	• **Product segment:** Measuring wheels and measuring wheel mechanics • **Product family:** Measuring wheels • **Description:** Measuring wheel with O-ring (NBR70) for 10 mm solid shaft, circumference 500 mm	BEF-MR010050R	2055227
	• **Product segment:** Measuring wheels and measuring wheel mechanics • **Product family:** Measuring wheel mechanics • **Description:** SICK modular measuring wheel system for face mount flange encoder with S4 mechanical design (10 mm x 19 mm solid shaft), e.g., DFS60-S4: with O-ring measuring wheel, circumference 200 mm	BEF-MRS-10-U	2085714

	Brief description	Type	part no.
	• **Suitable for:** Face mount flange encoder DFS60, DBS60, AFM60, AFS60, mechanical design S4 (solid shaft 10 mm x 19 mm)		
	• **Product segment:** Measuring wheels and measuring wheel mechanics • **Product family:** Measuring wheels • **Description:** Aluminum measuring wheel with cross-knurled surface for 10 mm solid shaft, circumference 500 mm	BEF-MR10500AK	4084733
	• **Product segment:** Measuring wheels and measuring wheel mechanics • **Product family:** Measuring wheels • **Description:** Aluminum measuring wheel with smooth polyurethane surface for 10 mm solid shaft, circumference 500 mm	BEF-MR10500AP	4084734
	• **Product segment:** Measuring wheels and measuring wheel mechanics • **Product family:** Measuring wheels • **Description:** Aluminum measuring wheel with ridged polyurethane surface for 10 mm solid shaft, circumference 200 mm	BEF-MR10200APG	4084740
	• **Product segment:** Measuring wheels and measuring wheel mechanics • **Product family:** Measuring wheels • **Description:** Aluminum measuring wheel with studded polyurethane surface for 10 mm solid shaft, circumference 200 mm	BEF-MR10200APN	4084739
	• **Product segment:** Measuring wheels and measuring wheel mechanics • **Product family:** Measuring wheels • **Description:** Aluminum measuring wheel with smooth polyurethane surface for 10 mm solid shaft, circumference 200 mm	BEF-MR10200AP	4084738
	• **Product segment:** Measuring wheels and measuring wheel mechanics • **Product family:** Measuring wheels • **Description:** Aluminum measuring wheel with cross-knurled surface for 10 mm solid shaft, circumference 200 mm	BEF-MR10200AK	4084737
	• **Product segment:** Measuring wheels and measuring wheel mechanics • **Product family:** Measuring wheels • **Description:** Aluminum measuring wheel with ridged polyurethane surface for 10 mm solid shaft, circumference 500 mm	BEF-MR10500APG	4084736
	• **Product segment:** Measuring wheels and measuring wheel mechanics • **Product family:** Measuring wheels • **Description:** Aluminum measuring wheel with studded polyurethane surface for 10 mm solid shaft, circumference 500 mm	BEF-MR10500APN	4084735

SICK AT A GLANCE

SICK is one of the leading manufacturers of intelligent sensors and sensor solutions for industrial applications. A unique range of products and services creates the perfect basis for controlling processes securely and efficiently, protecting individuals from accidents and preventing damage to the environment.

We have extensive experience in a wide range of industries and understand their processes and requirements. With intelligent sensors, we can deliver exactly what our customers need. In application centers in Europe, Asia and North America, system solutions are tested and optimized in accordance with customer specifications. All this makes us a reliable supplier and development partner.

Comprehensive services complete our offering: SICK LifeTime Services provide support throughout the machine life cycle and ensure safety and productivity.

For us, that is “Sensor Intelligence.”

WORLDWIDE PRESENCE:

Contacts and other locations –www.sick.com