1241396-3 ✔ ACTIVE

AMP | AMP MCP Connector System

TE Internal #: 1241396-3

Automotive Terminals, Receptacle, Mating Tab Width 2.8 mm [.11 in], Tab Thickness .6 mm [.031 in / .024 in], AMP MCP Connector System

View on TE.com >

Terminals & Splices > Automotive Terminals > AMP MCP, RECEPTACLE AND TAB



Terminal Type: **Receptacle**

Mating Tab Width: **2.8 mm [.11 in]**

Mating Tab Thickness: **.6 mm [.024 in, .031 in]**

Terminal Transmits: **0 - 24 A (Low Power)**

Wire Size: **17 - 13 AWG**

All AMP MCP, RECEPTACLE AND TAB (109)

Features

Product Type Features

Receptacle Style	180°
Sealable	Yes
Primary Locking Feature	Locking Lance

Body Features

Terminal Seal Type	Single Wire Seal (SWS)

Contact Features

Contact Size	2.8K
Contact Fabrication	Stamped & Formed
Wire Contact Termination Area Plating Material	Silver
Typical Current Rating	22 A
Crimp Type	F-Crimp
Terminal Type	Receptacle
Mating Tab Width	2.8 mm[.11 in]
Mating Tab Thickness	.6 mm[.024 in][.031 in]
Interface Plating	Silver (Ag)

Termination Features

Termination Method to Wire & Cable	Crimp

Product Terminates To	Wire

Dimensions

Compatible Insulation Diameter Range	2.2 - 2.4 mm[.087 - .118 in]
Wire Size	1 - 2.5 mm²
Wire Size Search	13 AWG, 14 AWG, 15 AWG, 16 AWG, 17 AWG

Usage Conditions

Insulation Option	Uninsulated
Operating Temperature (Max)	80 °C, 85 °C, 90 °C, 100 °C, 105 °C, 110 °C, 120 °C, 125 °C, 130 °C, 140 °C[176 °F][185 °F][194 °F][212 °F][221 °F][230 °F][248 °F][257 °F][266 °F][284 °F]
Operating Temperature Range	-40 - 140 °C[-40 - 284 °F]

Operation/Application

Conforms to KOMAX Automatic Component Insertion Guideline	Yes, per Version 5.0 (March 2018)
Compatible With Wire Base Material	Copper

Packaging Features

Packaging Quantity	3500
Packaging Method	Reel

Other

Terminal Transmits	0 - 24 A (Low Power)

Product Compliance

For compliance documentation, visit the product page on TE.com>

EU RoHS Directive 2011/65/EU	Compliant
EU ELV Directive 2000/53/EC	Compliant
China RoHS 2 Directive MIIT Order No 32, 2016	No Restricted Materials Above Threshold
EU REACH Regulation (EC) No. 1907/2006	Current ECHA Candidate List: JAN 2024 (240) Candidate List Declared Against: JAN 2024 (240) Does not contain REACH SVHC
Halogen Content	Low Halogen - Br, Cl, F, I < 900 ppm per homogenous material. Also BFR/CFR/PVC Free
Solder Process Capability	Not applicable for solder process capability

Product Compliance Disclaimer

This information is provided based on reasonable inquiry of our suppliers and represents our current actual knowledge based on the information they provided. This information is subject to change. The part numbers that TE has identified as EU RoHS compliant have a maximum concentration of 0.1% by weight in homogenous materials for lead, hexavalent chromium, mercury, PBB, PBDE, DBP, BBP, DEHP, DIBP, and 0.01% for cadmium, or qualify for an exemption to these limits as defined in the Annexes of Directive 2011/65/EU (RoHS2). Finished electrical and electronic equipment products will be CE marked as required by Directive 2011/65/EU. Components may not be CE marked. Additionally, the part numbers that TE has identified as EU ELV compliant have a maximum concentration of 0.1% by weight in homogenous materials for lead, hexavalent chromium, and mercury, and 0.01% for cadmium, or qualify for an exemption to these limits as defined in the Annexes of Directive 2000/53/EC (ELV). Regarding the REACH Regulation, the information TE provides on SVHC in articles for this part number is based on the latest European Chemicals Agency (ECHA) 'Guidance on requirements for substances in articles' posted at this URL: https://echa.europa.eu/guidance-documents/guidance-on-reach

Compatible Parts



TE Part # CAT-M8793-CH8172
MQS, CONNECTOR HOUSING



TE Part # 1-1579007-2
EXTRACTION TOOL



TE Part # 963293-1
SEALING F JPT+2,8

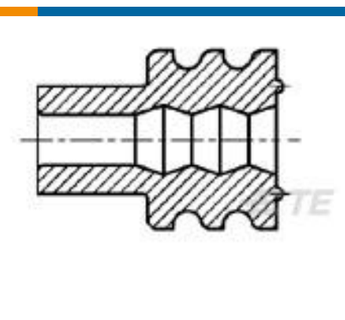

TE Part # 963292-1
WIRE SEALING 2,2



TE Part # CAT-AM705-CH8172
AMP MCP, SEALED CONNECTOR HOUSING

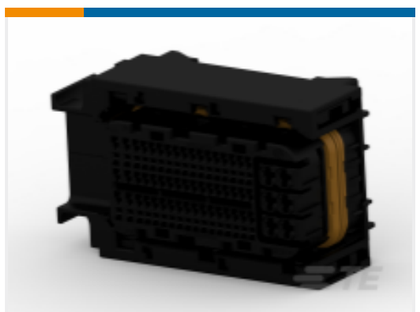

TE Part # 1-2208709-1
91POS, MIXED,REC HSG,ASSY, SEALED



TE Part # 1579008-9
INSERTION TOOL



TE Part # 2151063-1
OCEAN_2.0_APPLICATOR-S-100F165O-RSM



TE Part # 2151063-2
OCEAN_2.0_APPLICATOR-S-100F165O-RSA



TE Part # 2305570-1
Strip Terminal Cutter-Side Feed-No Crimp



TE Part # 2391790-1
SDE F AMP MCP 2.8 1.50-2.50 ASSY



TE Part # 2391790-2
SDE F AMP MCP 2.8 1.50-2.50 DIE SET



TE Part # 5-2151063-1
OCEAN_2.0_APPLICATOR-S-100F165O-RSM



TE Part # 5-2151063-2
OCEAN_2.0_APPLICATOR-S-100F165O-RSA

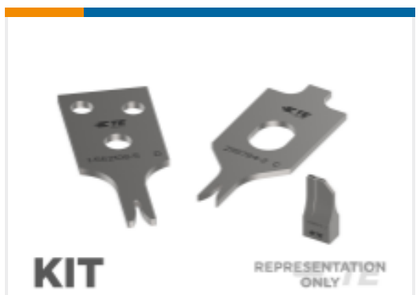

TE Part # 7-2151063-7
OCEAN_2.0_SPARE_PART_KIT-100F165O

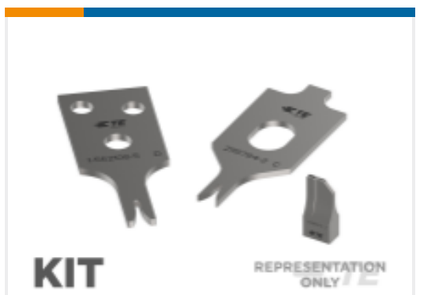

TE Part # 7-2266074-7
OC-100F165O-752-CRIMPTOOLINGKIT



TE Part # 9-2289228-1
CONNECTOR, 94POS



TE Part # 2209545-1
94P,MQS CB,REC HSG,ASSY,SEALED

TE Part # 3-2289228-1
CONNECTOR, 94POS

TE Part # 7-2289228-1
CONNECTOR, 94POS

Also in the Series | AMP MCP Connector System



Automotive Connector Caps & Covers (24)

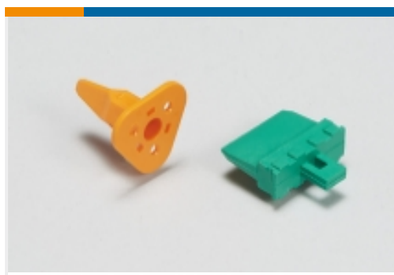

Automotive Connector Locks & Position Assurance(4)



Automotive Housings(291)



Automotive Terminals(110)



Connector Seals & Cavity Plugs(6)



Insertion & Extraction Tools(13)



Other Automotive Connector Accessories(2)

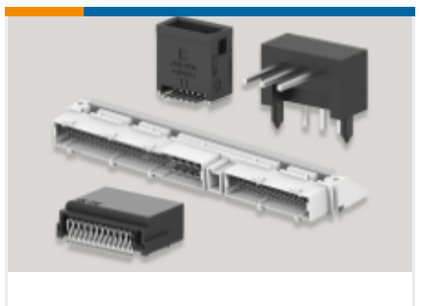

PCB Headers & Receptacles(28)

Customers Also Bought



TE Part # 160916-3
250 FASTON,REC.,17-14 AWG,PB



TE Part # 962942-2
TIMER, RECEPTACLE AND TAB



TE Part # 1241394-3
AMP MCP, RECEPTACLE AND TAB



TE Part # 1-1801155-5
COVER FOR 2W HP CONNECTOR



TE Part # 1-2141876-3
TAB A 2.8x0.8 CONTACT CF SWS Au



TE Part # 1801176-5
2W RECEPTACLE HPSL CONNECTOR GREEN



TE Part # 346102-2
RING TONGUE 0.5-1.0 MM2 0.6 X 15.2 CUSN

Documents

Product Drawings

AMP MCP 2.8K, CONTACT, SWS

English

CAD Files

3D PDF

3D

Customer View Model

ENG_CVM_CVM_1241396-3_C.2d_dxf.zip

English

Customer View Model

ENG_CVM_CVM_1241396-3_C.3d_igs.zip

English

Customer View Model

ENG_CVM_CVM_1241396-3_C.3d_stp.zip

English

By downloading the CAD file I accept and agree to the Terms and Conditionsof use.

Product Specifications

Application Specification

German

Application Specification

English

Application Specification

German